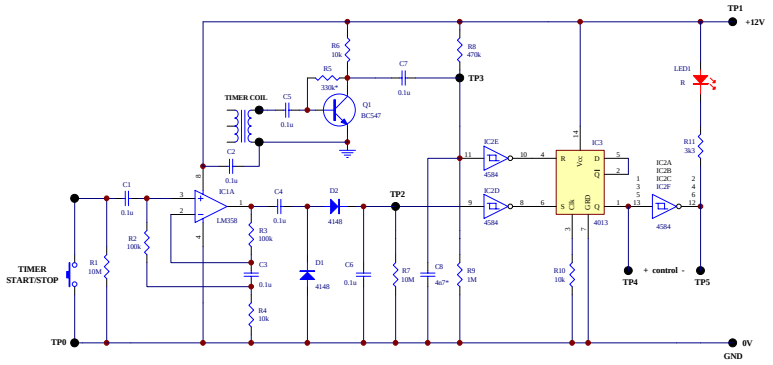

Title	TIMER INTERPHASE		
Size B	Number 1		Revision 1
Date: 29-Mar-2008		Sheet of	
File: C:\ADVSCH\TIMERINT.SCH		Drawn By: Les Bankl	