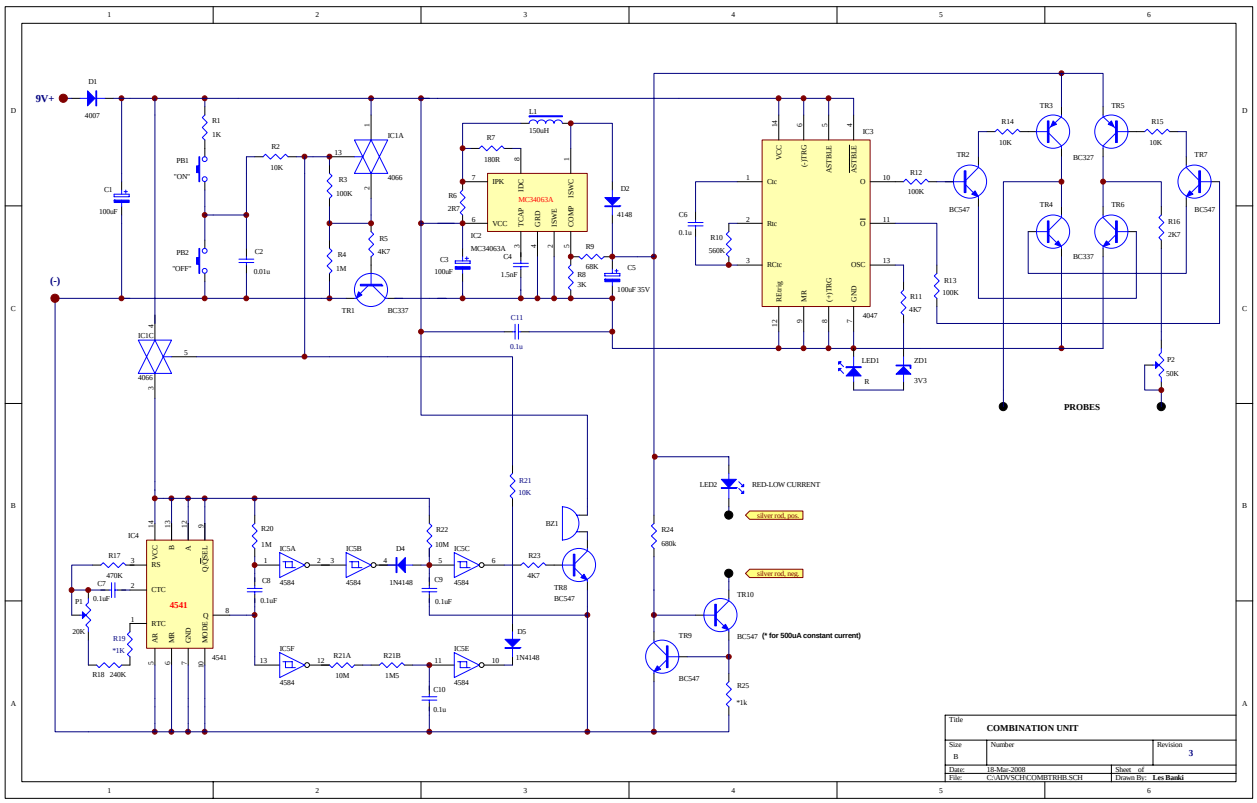
9V+
D1
4007
C1
100uF
(-)
R1
1K
PB1
"ON"
PB2
"OFF"
R2
10K
C2
0.01u
IC1A
4066
R3
100K
R4
1M
R5
4K7
TR1
BC337
IC1C
4066
IC4
4541
R17
470K
C7
0.1uF
P1
20K
R19
*1K
R18
240K
R20
1M
C8
0.1uF
IC5A
4584
IC5B
4584
D4
1N4148
IC5C
4584
R22
10M
C9
0.1uF
IC5F
4584
R21A
10M
R21B
1M5
C10
0.1u
IC5E
4584
D5
1N4148
R21
10K
BZ1
R23
4K7
TR8
BC547
L1
150uH
R7
180R
IC2
MC34063A
R6
2R2
C3
100uF
C4
1.5nF
D2
4148
R9
68K
R8
3K
C5
100uF 35V
C11
0.1u
IC3
4047
C6
0.1u
R10
560K
R12
100K
R13
100K
R11
4K7
LED1
R
ZD1
3V3
TR2
BC547
TR3
BC327
TR4
BC337
TR5
TR6
TR7
BC547
R14
10K
R15
10K
R16
2K7
P2
50K
PROBES
LED2
RED-LOW CURRENT
silver rod, pos.
silver rod, neg.
R24
680k
TR10
BC547
(* for 500uA constant current)
TR9
BC547
R25
*1k
Title
COMBINATION UNIT
Size
B
Number
Revision
3
Date:
18-Mac-2008
Sheet of
File:
C:\ADYSC\JYCOMBTTR\BLSCH
Drawn By:
Les Banks