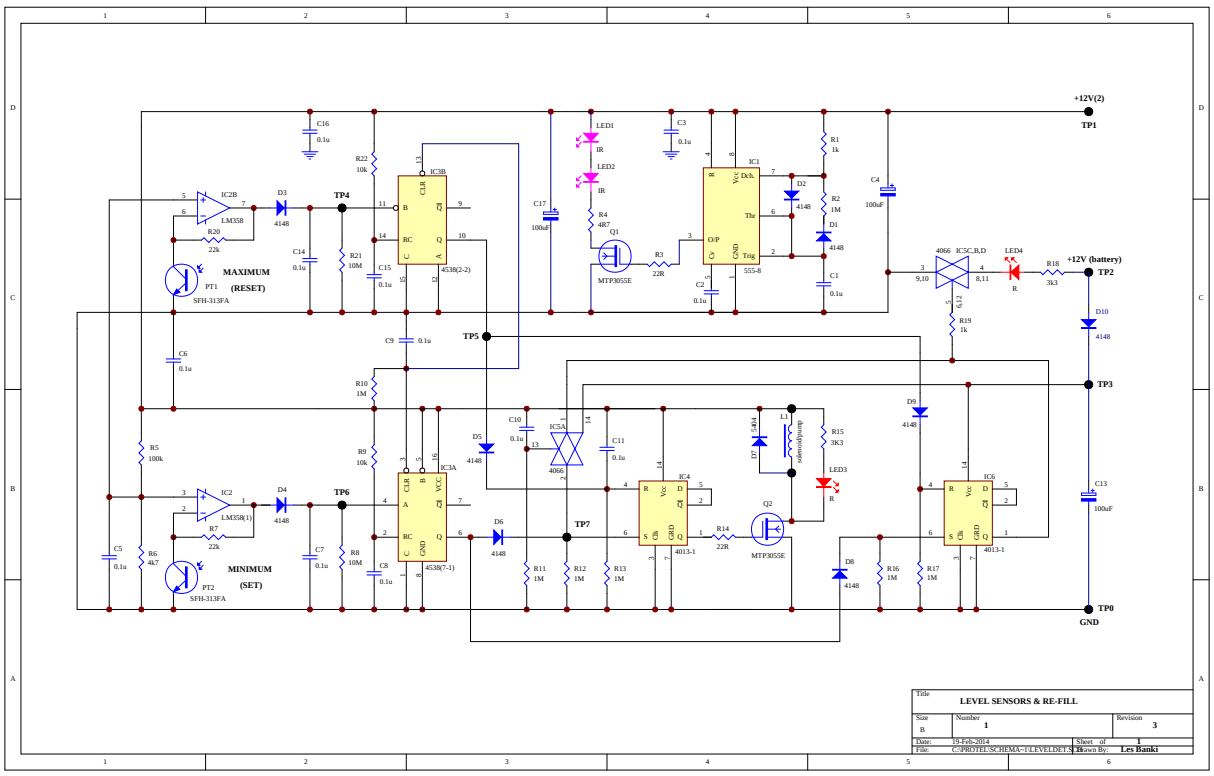
+12V(2)
TP1
+12V (battery)
TP2
TP3
TP0
GND
TP4
TP5
TP6
TP7
MAXIMUM
(RESET)
MINIMUM
(SET)
IC2B
LM358
IC2
LM358(1)
PT1
PT2
SFH-313FA
IC3B
IC3A
4538(2-2)
4538(7-1)
IC1
555-8
IC4
IC6
4013-1
IC5A
IC5C,B,D
4066
Q1
Q2
MTP3055E
solenoidpump
LED1
LED2
LED3
LED4
IR
R
D1
D2
D3
D4
D5
D6
D8
D9
D10
4148
R1 1k
R2 1M
R3 22R
R4 487
R5 100k
R6 4k7
R7 22k
R8 10M
R9 10k
R10 1M
R11 1M
R12 1M
R13 1M
R14 22R
R15 3K3
R16 1M
R17 1M
R18 3k3
R19 1k
R20 22k
R21 10M
R22 10k
C1 0.1u
C2 0.1u
C3 0.1u
C4 100uF
C5 0.1u
C6 0.1u
C7 0.1u
C8 0.1u
C9 0.1u
C10 0.1u
C11 0.1u
C13 100uF
C14 0.1u
C15 0.1u
C16 0.1u
C17 100uF
L1
Title
LEVEL SENSORS & RE-FILL
Size
B
Number
1
Revision
3
Date:
19-Feb-2014
Sheet of
1
File:
C:\PROTELSCHEMA~1\LEVELDET.SCH
Drawn By:
Les Banki