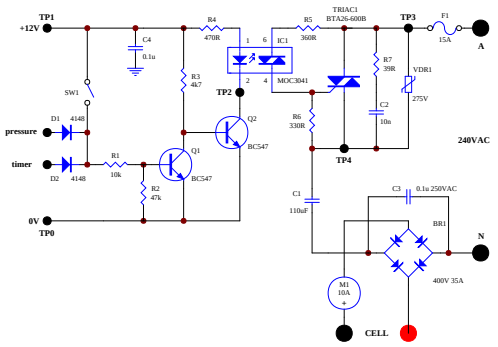

Title	SUPER SIMPLE 2KW ELECTROLYZER POWER SUPPLY		
Size B	Number 1		Revision 1
Date: 19-Feb-2014		Sheet of 1	
File: C:\PROTEL\SCHEMA~1\SS2KWEPS.SCH		Drawn By: Les Banki	