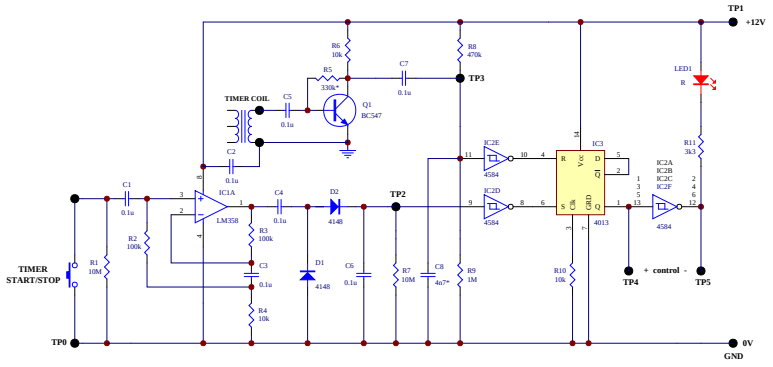

Title	TIMER INTERPHASE		
Size B	Number 1		Revision 1
Date: 19-Feb-2014		Sheet of	
File: C:\PROTEL\SCHEMA~1\TIMERINT.SCH		Drawn By:	Les Banks