Typical Deluxe Gaseous Intercooling™ System Using 2 Quart Reservoir

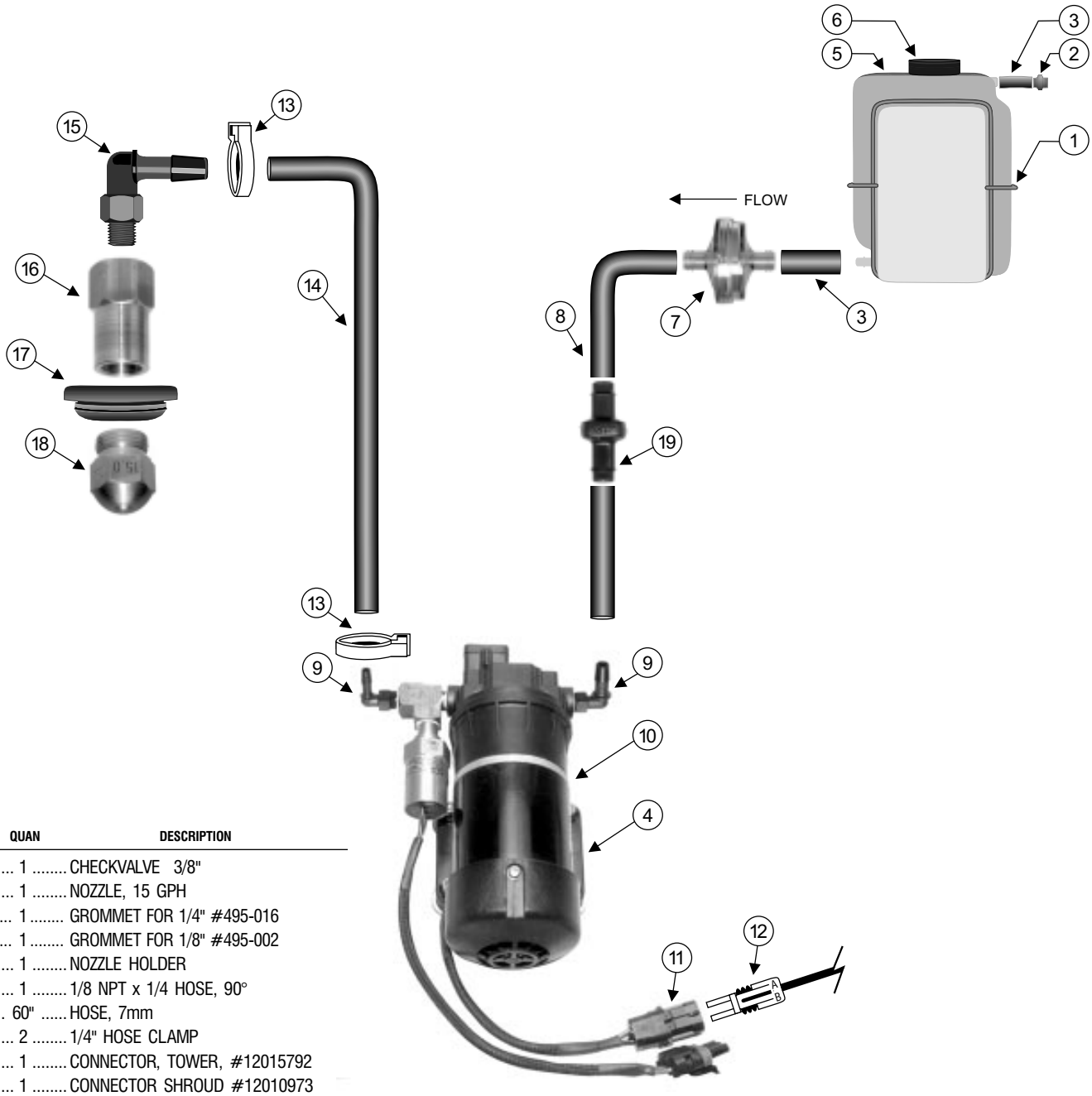

ITEM	QUAN	DESCRIPTION
19	1	CHECKVALVE 3/8"
18	1	NOZZLE, 15 GPH
17	1	GROMMET FOR 1/4" #495-016
17	1	GROMMET FOR 1/8" #495-002
16	1	NOZZLE HOLDER
15	1	1/8 NPT x 1/4 HOSE, 90°
14	60"	HOSE, 7mm
13	2	1/4" HOSE CLAMP
12	1	CONNECTOR, TOWER, #12015792
11	1	CONNECTOR SHROUD #12010973
10	1	PUMP ASSY.
9	2	1/4" NPT x 1/4" HOSE, 90°
9	2	ADAPTOR, 1/4" MPT x 1/4" HOSE 90°
8	60"	HOSE, 5/16" id TRICO 91-543
7	1	FILTER, #81-0240
6	1	CAP
5	1	RESERVOIR – 2 L
4	4	SCREW, PUMP MOUNT
3	2	HOSE – 5/16" id x 105"
2	1	CHECKVALVE 3/8"
1		RESERVOIR HANGER