ELECTROLYTIC CAPACITORS

The Theory, Construction, Characteristics and Application of All Types

by

PAUL McKNIGHT DEELEY

THE CORNELL-DUBILIER ELECTRIC CORP.
SOUTH PLAINFIELD, NEW JERSEY
1938

Digitized by Google Original from UNIVERSITY OF MICHIGAN

Copyright, 1938, by
PAUL MCKNIGHT DEELEY

Printed in the U.S.A.
By the Recorder Press
Plainfield, New Jersey

Digitized by Google Original from UNIVERSITY OF MICHIGAN

Physics
Water
12-14-38
31520

PREFACE

The past five years have seen a steady increase in the number of electrolytic capacitors placed in use. Not only the quantity of electrolytic capacitors in service has increased but the scope of application has also broadened. While a large percentage of the electrolytic capacitors produced has been used in filter and by-pass applications, in radio receiver circuit networks, an increasing percentage is finding application in industrial fields.

To a large number of design engineers, laboratory technicians and servicemen, the electrolytic capacitor, its construction and behavior, has been something of a mystery. This is due, to a large extent, to the fact that only a limited amount of technical information has been available in printed form.

It is true that technical articles, of limited scope, have infrequently appeared in various publications but no complete information has been available.

To remedy this situation, the author has prepared this book in the hope of making available, to the radio and electrical engineering fraternity, a fairly complete source of technical information on the theory, construction, characteristics and application of electrolytic capacitors of all types.

It is well recognized that the various fabricators of electrolytic capacitors have many processes that may be termed "trade secrets" and for that reason the author has studiously avoided the disclosure of any data relating to such processes. On the other hand,

Digitized by Google Original from UNIVERSITY OF MICHIGAN

special effort has been made to cover the subject of electrolytic capacitors in sufficiently great detail to provide the reader with authentic and useful information.

The information contained in this publication has been accumulated as a direct result of the author's personal experience in making laboratory investigations in the electrolytic capacitor art and no patent liability is assumed with respect to the use of any information contained herein.

PAUL MCKNIGHT DEELEY.

Plainfield, N. J.
September, 1938.

Digitized by Google Original from UNIVERSITY OF MICHIGAN

CONTENTS

CHAPTER I

ELECTROLYTIC CAPACITORS 1

Construction of Matter. Solids. Liquids. Gases. Molecules. Atoms. Electrons. Conductors. Insulators and Dielectrics. Electrical Capacitors. Capacity. Capacity Calculation. Electrolytic Capacitors. The Metal Oxide Film. Types of Electrolytic Capacitors.

CHAPTER II

BASIC THEORY OF OPERATION OF ELECTROLYTIC CAPACITORS 12

Film Forming Metals. Aluminum. The Electrolytic Cell. Aluminum Oxide Dielectric Film. Capacity Relationship. Cause of Polarization. Cause of Leakage Current. Electron Emission. Voltage Gradient. Structural Limitations. Sparking Voltage. Design Factors.

CHAPTER III

TYPES OF ELECTROLYTIC CAPACITORS 21

Wet Type. Component Parts. Containers. Physical Sizes. Container Covers. Vents. Mountings. Anode Structures. Anode Supports. Stem Bushings. Stem Seals. Terminals. Separators. Electrolytes.

CHAPTER IV

THE FABRICATION OF WET ELECTROLYTIC CAPACITORS . 36

Anodes. Plain. Etched. Etching Methods. Chemical Etching. Hydrochloric Acid Etching. Copper Chloride and Hydrochloric Acid Etching. Copper Chloride Etching.

CHAPTER V

FORMATION OF ANODIC FILMS 46

Cleaning of Anode Assemblies. Cleaning of Plain Surface Aluminum. Sodium Hydroxide and Nitric Acid Method. Sodium Carbonate Method. Potassium Dichromate and Sulphuric Acid Method. Cleaning Etched Surface Aluminum. Sodium Borate Method. Potassium Dichromate and Sulphuric Acid Method. Anodic Film Formation. Formation Elec-

Digitized by Google Original from UNIVERSITY OF MICHIGAN

trolytes. Sulphuric Acid Formations. Oxalic Acid Formations. Active and Inactive Anodic Films. Boric Acid and Sodium Borate Formations. Still Formation. Continuous Formation. Relationship of Anode Area and Capacity. Fill Electrolytes. Electrolyte Resistivities. Low Temperature Electrolytes.

CHAPTER VI

AGING AND CHARACTERISTICS OF WET ELECTROLYTIC CAPACITORS 70

Aging. Electrical Characteristics. Effects of Temperature. Idle Shelf Life. pH Values of Fill Electrolytes. Life. Operating Limitations. Alternating Current Components. Chromium Plated Containers. Regulating Types. Regulation.

CHAPTER VII

THE DRY TYPE OF ELECTROLYTIC CAPACITOR . . . 84

History. Basic Construction. Windings. Anode and Cathode Foils. Tabs. Anode Plate. Cathode Plate. Separators. Paper. Gauze. Cellophane. Electrolytes.

CHAPTER VIII

THE FABRICATION OF DRY ELECTROLYTIC CAPACITORS . 94

Anode Foils. Plain. Etched. Etching Procedure. Solution Concentrations. Temperature Effects. Cleaning Methods. Continuous Etching. Electrochemical Etching. Metal Clad Anodes. Characteristics of Metal Clad Anode Structures.

CHAPTER IX

FORMATION OF THE ANODIC FILM 105

Still Formation. Forming Tanks. Continuous Formation. Voltage Gradient. Multiple Formation. Formation Electrolytes. Voltage Limitations. Relationship of Anode Area and Capacity. Rated Voltage and Formation Voltage.

CHAPTER X

NON-AQUEOUS ELECTROLYTES AND THEIR CHARACTERISTICS 119

Electrolyte Structures. Fillers. Organic Acid Types. Aliphatic Acids. Aromatic Acids. Acid Salts. Solvent

Digitized by Google Original from UNIVERSITY OF MICHIGAN

Types. Hydroxy-alkylamines. pH Values and Conductivities. Boric Acid and Glycol. Glyco-Ammonium Borates. Resistivity Factors. Boric Acid Content. Ammonium Content. Boiling Point Temperatures. Scintillating Potentials. Plastic and Resinous Types of Electrolytes.

CHAPTER XI

WINDING AND IMPREGNATION OF DRY ELECTROLYTIC CAPACITORS 140

Windings. Soak Impregnation. Vacuum Soak Impregnation. Hand Pasting. Machine Pasting. Hydrostatic Impregnation. Separator Limitations. Centrifugal Force and Centrifuges.

CHAPTER XII

TYPES OF DRY ELECTROLYTIC CAPACITORS . . . 149

Polarized and Non-Polarized Types. Multiple Section. Common Cathode Concentric Windings. Common Anode Structures. Limitations. Containers. Cardboard Tubes and Boxes. Aluminum Cans. Terminals. Methods of Mounting.

CHAPTER XIII

CHARACTERISTICS AND AGING OF DRY ELECTROLYTIC CAPACITORS 161

Electrical Characteristics. Temperature and Leakage Current. Temperature and Capacity. Temperature and Voltage Breakdown. Temperature and Equivalent Series Resistance. Direct Current Leakage. Regulation. Equivalent Series Resistance. Separator Thickness. Radio Frequency Characteristics. Idle Shelf Life. Leakage Recovery. Active Life. Over Voltage Breakdown. Aging.

CHAPTER XIV

TESTING OF ELECTROLYTIC CAPACITORS 184

Fundamental Relationships. Impedance. Phase Angle. Phase Difference. Power Factor. Measurement of Direct Current Leakage. Circuit Net Works. Regulation. Leakage Recovery. Scintillating Voltage. Measurement of Capacity. Equivalent Series Resistance. Impedance Measurement of Capacity. Bridge

Digitized by Google Original from UNIVERSITY OF MICHIGAN

Measurements. Bridge Circuit Networks. Resistance Substitution. Determinations of Capacity and Equivalent Series Resistance. Applications of Electrolytic Capacitors.

CHAPTER XV

RECTIFIERS AND FILTER CIRCUITS 206

Rectifiers. Half Wave. Full Wave. High Vacuum Type. Mercury Vapor Type. Limitations. Bridge Circuit. Voltage Doubling Circuit. Current Doubling Circuit. Filters. Low Pass Filters. Attenuation. L Type Filters. Filter Characteristics. Attenuation of A.C. Component. Effect of Power Factor. Multiple Section Filters. Low Voltage Rectifiers. Copper Oxide Rectifier. Chemical Rectifiers. Tungar Rectifier. By-Pass Capacitor Applications. Voltage Multiplication.

CHAPTER XVI

ALTERNATING CURRENT TYPE OF ELECTROLYTIC CAPACITORS 235

Non-polarized Cell. Theory. Voltage Distribution. Energy Relationship. Basic Construction. Fabrication. Anode Members. Capacity Relationships. Separator Material. Electrolytes. Containers. Aging. Testing. Measurement of Capacity and Power Factor. Characteristics. Effects of Temperature on Capacity and Power Factor. Over Voltage Effects. Idle Shelf Life. Accelerated Tests. Application of A.C. Electrolytic Capacitors. Capacitor Motors. Basic Circuits. Capacity and Torque. Power Factor and Torque. Operating Limitations. Container Constructions.

CHAPTER XVII

APPENDIX OF USEFUL INFORMATION 261

Measurement of Peak Voltages. Resistivity Measurements. Audio Frequency Impedance Determinations. Radio Frequency Impedance Determinations. Conduction of Life Tests. Metric Equivalents. Temperature Conversion Factors. pH Values of Acid and Bases. pH Values of Indicators. Melting Points of Waxes and Resins.

INDEX 271

Digitized by Google Original from UNIVERSITY OF MICHIGAN

ELECTROLYTIC CAPACITORS

Digitized by Google Original from UNIVERSITY OF MICHIGAN

Digitized by Google
Original from
UNIVERSITY OF MICHIGAN

Chapter I

ELECTROLYTIC CAPACITORS

Construction of Matter

MATTER is anything that is acted upon by gravity. The force of gravity gives matter weight. Matter occupies space. Although it is always physical and concrete, matter can be in an invisible form, for example, a gas such as hydrogen or oxygen.

Matter exists in three states; namely, solid, liquid and gaseous.

Solid matter tends to hold its shape when acted upon by a force. For example, if a weight of one pound is suspended from one end of a ten inch length of No. 20 B. & S. gauge steel piano wire, it will be found by careful measurement that the wire has stretched. If the weight is removed another measurement will show that the wire has returned to its original length.

Liquid matter, in general, does not oppose a change in its shape when acted upon by a force. Liquid mercury will run about when spilled on a flat surface or if it is poured into a bottle, it will assume the shape of the bottle.

Gaseous matter tends continually to occupy a greater volume, in other words, to diffuse. Liquid ammonia is a solution of a gas called ammonia in water. If some liquid ammonia is spilled the ammonia gas is liberated and fills the whole room with its distinctive odor.

Digitized by Google Original from UNIVERSITY OF MICHIGAN

Many substances can occur in the three states. The state in which a substance is found is dependent upon the temperature and pressure. For example, air can be liquefied by subjecting it to a very low temperature and a very high pressure. In turn, this liquid air can be frozen by a further reduction in temperature.

Molecules

All matter is composed of extremely small particles called molecules. There are as many kinds of molecules as there are substances.

The molecule is the smallest integral part of any substance. Thus, a water molecule is the smallest water particle and is totally different from a mercury molecule, a wood molecule or a molecule of any other substance. In other words, the molecule has an individuality. The nature of a given substance is dependent solely upon the molecules of which it is composed.

Each molecule is separate and distinct from all other molecules. It is free to move about and is believed to be in a continual and very rapid state of vibration, or oscillation, at ordinary temperatures. It is thought that one molecule collides with other molecules many millions of times per second, even in air. The rate of vibration and the number of collisions vary with the temperature and the density of the substance.

The molecules are relatively very closely packed together in solids, yet each molecule is able to oscillate about a mean position and is never in permanent contact with other molecules. They cannot, however, travel far. When heat is applied to one end of a metal

Digitized by Google Original from UNIVERSITY OF MICHIGAN

rod, the molecules at that end vibrate more rapidly and violently and drive the neighboring molecules away, thus increasing the space around themselves. This action is transmitted along the length of the rod and heat is finally felt at the other end. The length of the rod is also increased. This expansion is caused by the space between the molecules having been increased.

The difference between solids, liquids and gases is in the degree of separation of the molecules, the molecules themselves remaining unchanged. There is very little attraction among the molecules in liquids and still less in gases. This is evidenced by the fact that liquids flow and that gases will become diffused or mix with air.

Atoms

The molecules are composed of small particles called atoms. The atom is the smallest particle of matter obtainable by chemical action.

Some molecules are made up of only one atom, such as the monatomic gas molecules, while others are more complex and contain many atoms of different kinds. For example, two atoms of hydrogen, combined, form hydrogen gas, and the combination of twelve atoms of carbon, twenty-two atoms of hydrogen and eleven atoms of oxygen forms ordinary cane sugar.

It is thought that there are some ninety odd different kinds of atoms and that the almost infinite number of combinations of atoms possible constitute the endless variety of molecules and, therefore, of substances in the world.

Digitized by Google Original from UNIVERSITY OF MICHIGAN

Atoms vary in size and weight. The hydrogen atom is the lightest known. Its weight is taken as unity and the atomic weight of all other atoms is given relatively to that of the hydrogen atom. For example, the atomic weight of lead is 206.4.

Electrons

Atoms in turn have a structure. This structure is, essentially, of two parts, one of which is called the nucleus while the other part consists of one or more electrons.

Atoms differ from one another only in the number and arrangement of electrons that constitute them.

The nucleus of the atom is considered as being composed of both positive and negative electrons, but with the positive electrons predominating so that the nucleus is always of a positive nature.

In order to more easily identify them, the positive electrons are called protons and the negative electrons simply electrons.

The electrons and protons of the nucleus are closely bound together but exterior to the nucleus of the atom, there are a number of negative electrons more loosely bound and are therefore more or less free agents that can leave their atomic home with little urging.

The electron, however, does not ordinarily exist in a free or isolated state and normally has a sort of family life, in combination with other electrons, in the atom.

Ordinarily, the atom is electrically neutral, the outer electrons balancing the positive nucleus. If, how-

Digitized by Google Original from UNIVERSITY OF MICHIGAN

ever, something happens to disturb this balance the loosely bound or foot-loose electrons begin to leave home and electrical activity becomes evident.

Electricity is simply the evidence of electrons in motion and electrons in motion constitute an electric current.

The ease with which electrons are able to be transferred from one atom to another in any material is a measure of the electrical conductivity of that material. If the electrons can readily leave home and pass from one atom to another it is said that the material is a good conductor. On the other hand if the electrons find great difficulty in leaving one atom to pass to another of a material, it is said that the material is a non-conductor or insulator.

Silver, copper, aluminum and most metals are relatively good conductors of electricity.

Some substances do not act as conductors, that is, when they are acted upon by an electrical force there is practically no drift of electrons and, hence, no electrical current flow. Such substances serve a very useful purpose.

A perfect insulator or dielectric is one in which the atoms never lose an electron. Such a substance has an atomic structure believed to be of such a nature that the electrons are imprisoned in cells within the limits of which they can move. Under the influence of an electrical force every electron is impelled in one direction, out of its normal position in its cell, and held out of equilibrium only as long as the electrical force is acting. With every increase or decrease of the electrical force the electron is, respectively, more or less dis-

Digitized by Google Original from UNIVERSITY OF MICHIGAN

placed and the tension increased or decreased. As soon as the electrical force is removed, the electrons return to their normal positions in the atomic structure.

A rupture of the insulator or dielectric occurs if the electrons are strained beyond the elastic limit of the atomic structure. The atoms then lose an electron and the insulator becomes a conductor.

Electrical Capacitors

An electrical capacitor or electrical condenser is an electrical device which serves to store up electricity or electrical energy.

The action of storing up this electrical energy is somewhat similar to that of a gas tank used for the storage of gas.

Any electrical capacitor has three essential parts, two of which are usually metal plates separated and insulated by the third part called the dielectric.

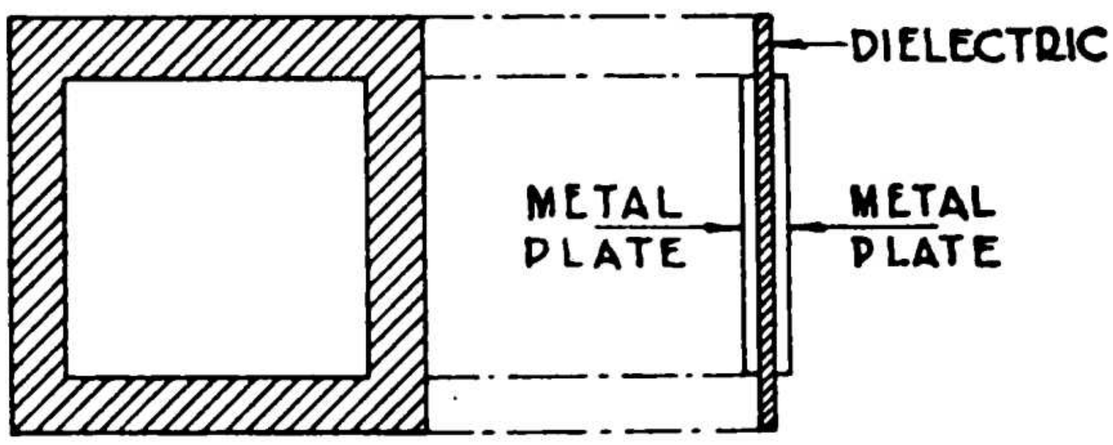

The amount of electricity which a capacitor will hold depends on the electrical pressure or voltage applied to the capacitor just as the amount of gas a tank will hold depends upon the pressure.

If the pressure is doubled on the gas tank, twice the amount of gas is forced into the tank, and if the

Digitized by Google Original from UNIVERSITY OF MICHIGAN

electrical pressure or voltage applied to a capacitor is doubled, twice the amount of electricity will be forced into the capacitor.

Capacitors, regardless of type or kind, are all designated by their electrical size. Obviously, when it is desired to designate the size of some object, some unit of measurement must be employed. In capacitors, this electrical size is designated as capacity.

The capacity of an electrical capacitor is the ratio of the quantity of electricity and the electrical pressure or voltage. In other words the capacity of a capacitor depends on the amount of electricity it will hold at a certain electrical pressure or voltage.

This ratio may be expressed as follows:

$$Q = CV$$

Q meaning quantity of electricity
C meaning the capacity of the capacitor
V meaning the electrical pressure or voltage

By the same token the capacity may be expressed as follows:

$$C = \frac{Q}{V}$$

Where the capacity is equal to the quantity of electricity divided by the electrical pressure or voltage.

The capacity of a capacitor is dependent upon the size and spacing of the conducting plates and the type of insulating or dielectric medium between the plates.

The dielectric of a capacitor is one of three essential parts. It may be found in solid, liquid or gaseous form or even in combinations of these forms in a given capacitor.

Digitized by Google Original from UNIVERSITY OF MICHIGAN

The simplest form of capacitor consists of two electrodes or conducting plates separated by air. This represents a capacitor having a gaseous dielectric.

Other dielectrics in common use are mica, paper, glass, sulphur, mineral and vegetable oils, waxes and synthetic insulating compounds such as the chlorinated groups.

It is common practice to divide or identify capacitors in accordance with the type of dielectric employed in their structures. For example, there are mica capacitors, air capacitors, oil capacitors and paper capacitors.

There is also another type of capacitor and that is the electrochemical type or electrolytic capacitor. It is to this type that this publication will be almost entirely devoted.

As was previously mentioned, the simplest form of capacitor consists of two metal plates separated by air. The air, of course, in this case, is the dielectric.

Also, as previously mentioned, the capacity of a capacitor is dependent on the size of the plates and the space between them as well as the kind of dielectric medium employed. Knowing these facts, it becomes apparent that there must exist some fixed relationship which would allow for the predetermination of any desired capacity. The most fundamental of such a relationship is expressed as follows:

$$C = 0.0885 \frac{KS}{t}$$

Where, C = Capacity in micro-microfarads.
K = dielectric constant.
S = area of one plate in square centimeters.
t = distance between plates in centimeters.

Digitized by Google Original from UNIVERSITY OF MICHIGAN

In other words, the capacity is proportional to the product of the area of one plate multiplied by the dielectric constant, divided by the thickness of the dielectric.

It is important that this fundamental fact be remembered, that doubling the area of the plates of a capacitor doubles the capacity and reducing the thickness of the dielectric by one-half also doubles the capacity of a capacitor.

If, in the simplest form of capacitor, the air space between the plates, be replaced with mica it would be found that the capacity will have increased in value.

Due to this increase in capacity, it is said that mica has a higher dielectric constant than air. Also in order that the mica dielectric can be said to have a certain definite dielectric constant, it has been established that air has a dielectric constant of one.

As has been mentioned, capacitors are designated by their electrical size or capacity and the unit of capacity is the farad.

The farad, unfortunately, represents a capacity so enormous that such a capacitor is rarely if ever produced or used. For practical purposes therefore, a small multiple of the farad is used. This is called the microfarad and is one millionth of a farad. A still smaller multiple is also in common use and this is the micro-microfarad or one millionth of one millionth of a farad. The microfarad is generally designated as MFD or MF and the micro-microfarad is MMFD or MMF.

There is still another designation which is applied to capacitors and that is the voltage rating. In relation

Digitized by Google Original from UNIVERSITY OF MICHIGAN

to this designation the gas tank analogy will again serve for illustrative purposes.

The pressure upon the gas in a tank cannot be increased indefinitely, for the tank will ultimately yield and break. Similarly there is a limit to the electrical pressure which can be applied to a capacitor, for the dielectric will be broken down or punctured if the limit is exceeded.

The voltage or electrical pressure at which a spark will pass and the dielectric be punctured is called the dielectric strength.

The dielectric strength of a given dielectric is determined by the thickness of the dielectric. In other words, the dielectric strength of a dielectric is determined by the thickness and kind of material.

Electrolytic Capacitors.

Basically, an electrolytic capacitor is similar to any other type of electrical capacitor in that it consists of two conducting surfaces separated by an insulating or dielectric medium.

The capacity of an electrolytic capacitor is determined by the same factors which apply to any other electrical capacitor. That is, the capacity varies directly in proportion to the area of the conducting surfaces and inversely in proportion to the thickness of the dielectric.

The electrolytic capacitor, however, departs from the more conventional types of electrical capacitors in that only one of its conducting surfaces is a metallic plate, the other conducting surface being a chemical

Digitized by Google Original from UNIVERSITY OF MICHIGAN

compound or electrolyte. The dielectric employed is a very thin film of oxide of the metal which constitutes the one metallic plate used in the structure.

This oxide, which constitutes the dielectric, possesses remarkable characteristics as an insulator under certain conditions. Under these conditions it is quite common practice to employ field strengths in the dielectric of the order ten million volts per centimeter of thickness. Although this is almost unbelievable, it is due to this fact that electrolytic capacitors can be fabricated which possess high capacity and small physical size.

Electrolytic capacitors are divided into two general types; namely, the wet electrolytic capacitor and the dry electrolytic capacitor. Fundamentally, there is no difference between these two types but physically there is sufficient difference to warrant their being treated separately in this publication.

Digitized by Google Original from UNIVERSITY OF MICHIGAN

Chapter II

BASIC THEORY OF OPERATION OF ELECTROLYTIC CAPACITORS

DURING the past fifteen years, various theories have been put forth in an attempt to explain the operation of electrolytic capacitors. These theories, which included the gas film theory and others, will not be repeated here, in order that the reader be not confused with these various ideas, none of which can be experimentally verified and most of which were held to be untenable for many reasons.

In the author's opinion, there is only one true explanation of the operation of an electrolytic capacitor and basic theory of operation will be confined to that opinion, not because of any arbitrary attitude or because it is the author's own theory but rather on the other hand, because all points can and have been experimentally verified, and also because all conditions can be met and checked.

For a long time, it has been known that several metals, such as tantalum, aluminum, magnesium, titanium, niobium, zirconium and zinc, can be coated with an oxide film by electrochemical means.

While the oxides of these metals exhibit different characteristics it was found that the oxides of tantalum and aluminum possessed highly desirable ones. While tantalum was found to possess an oxide of the most desirable characteristics its cost, so far, has limited its economical usefulness in electrolytic capacitors.

Digitized by Google Original from UNIVERSITY OF MICHIGAN

Aluminum, on the other hand, being both plentiful and sufficiently economical, has become the most widely used metal in electrolytic capacitor structures. This is the case to such an extent that all subsequent work will refer only to the use of aluminum as the anodic member of electrolytic capacitors.

An oxide film can be formed on aluminum by electrolytic means. This can be accomplished by introducing the metal into a suitable electrolyte, for example, an aqueous solution of boric acid and sodium borate, and passing an electric current through it, the aluminum forming the positive pole or anode. Upon electrolysis of the solution, oxygen is evolved at the positive pole which oxidizes the surface of the aluminum.

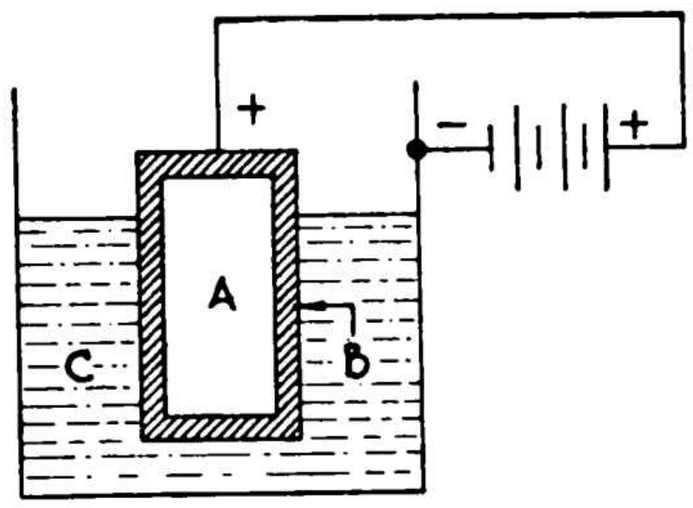

ELECTROLYTIC CELL

A is the aluminum anode
B is the aluminum oxide film
C is the electrolyte

The thin film of oxide (Al_2O_3) formed on an aluminum surface offers a very high resistance to further passage of current and if the applied voltage is kept constant, the current, after a time, will be reduced to a minimum value called the leakage current. A cell of this type, with aluminum as the anode and an electrolyte as a negative electrode or cathode, is used as a

Digitized by Google Original from UNIVERSITY OF MICHIGAN

capacitor, with the aluminum oxide film separating them, acting as an extremely thin dielectric.

The electrolytic capacitor has a high capacity per unit volume as compared to other types of capacitors.

The thickness of the oxide film covering the aluminum electrode is extremely thin (approximately 10^{-5} centimeters), and the dielectric constant K of the Al_2O_3 produced is high (approximately 10). If the capacity C is calculated per square centimeter, from the previously mentioned basic formula

$$C = 0.0885 \ \frac{KS}{t}$$

the following result is obtained:

$$C = 0.0885 \ \frac{10 \times 1}{10^{-5}}$$

$$= 0.0885 \text{ microfarads.}$$

From this it can be seen that an aluminum electrode, of 100 square centimeters surface, will produce a capacity of approximately 8.85 microfarads.

The electrolytic capacitor can only be used with a flow of current in one direction. The aluminum electrode must therefore always be connected to the positive side of the applied voltage, and the electrolyte must always be negative. With the current flowing through the capacitor in this direction, the current intensity is small. If the direction of current flow is reversed, a large current will flow through the capacitor and the capacitor as such becomes useless.

From this, it can be readily seen that the system exhibits the characteristics of a rectifier, and an electro-

Digitized by Google Original from UNIVERSITY OF MICHIGAN

lytic capacitor does not then differ in any way from the well known electrolytic rectifier.

Cause of Polarization

The difference in current transmissibility through the system—aluminum anode—aluminum oxide film—electrolyte—in the two directions (thus exhibiting definite "polarity") may be explained as follows:

It has already been mentioned that the oxide film is very thin, being of the order of 10^{-5} centimeters, so that if a potential difference of 100 volts is applied between the aluminum and the electrolyte, the field strength in the dielectric will be approximately 10^7 volts per centimeter. With such high field intensities, cold electron emission always takes place. That is, the negative electrode emits electrons.

If it is considered that two plane metal surfaces or electrodes between which the field intensity F is so high that the negative electrode emits electrons, it is then found that the electron current I can be represented by an equation of the following form:

$$I = AF^2e - \frac{B}{F}$$

Where A and B are constants of the materials.

If it is assumed that plate a emits electrons more readily than plate b, then this means that when an alternating current is applied the current passes through with greater facility on one half wave than on the other half, the greater current flowing when the plate which is more susceptible to electronic emission constitutes the negative electrode.

Digitized by Google Original from UNIVERSITY OF MICHIGAN

To rectify a current, a thin layer of insulation is therefore necessary and must be bounded by two substances capable of emitting electrons to widely different degrees. If the substance which emits electrons the more easily is made the negative electrode, a higher current will flow than when it is positive.

Metals emit electrons easily and semi-conductors and electrolytes emit them with difficulty. The electrons in the electrolyte are in fact not free but are bound in ions, although the powerful electric field obtained can detach some of the electrons from the ions and transfer them to the insulating layer.

It is thus seen why the electrolytic capacitor must always be connected in such a manner that the electrolyte is the negative electrode, for then only will a small current flow through the capacitor.

Cause of "Leakage Current"

It is also apparent that the leakage current will be the lower, the smaller the number of ions present in the electrolyte, in other words, the less conductive it is.

It, now, should be quite evident why it would be impossible, or virtually so, to use a second metallic electrode in place of the electrolyte. In such a case the separating layer (aluminum oxide film) would be bounded by two substances which would emit electrons with almost the same facility.

A leakage current is generated because the electrolyte is also able to emit some electrons from the ions, under the influence of the powerful electric fields applied, such electrons migrating through the oxide film

Digitized by Google Original from UNIVERSITY OF MICHIGAN

to the aluminum electrode. This leakage current is determined by the field strength, the thickness of the oxide film and the conductivity of the electrolyte. If in capacitors made of the same materials the leakage currents are the same at equal potential differences, it may be concluded that the oxide films are of the same thickness. The field intensity is then equal to:

$$F = \frac{V}{t}$$

Where F = field strength
V = applied voltage
t = oxide thickness

If an aluminum electrode is oxidized in an electrolyte and a specific potential difference V_1 is applied, the current through the electrolyte will steadily decrease with time. At a small terminal value I, of this current, the oxidation process is considered as having been completed. Now, if a second aluminum electrode of the same dimensions is placed into the same electrolyte and a potential difference V_2, which is double the value of V_1, is applied until the leakage current has reached the same final value I, it may be then assumed that in the two capacitors the same field strength prevails at the oxide film. Since, however, $V_2 = 2V_1$, t_2 must be $2t$, and hence also the capacity of the second capacitor half as great as that of the first.

From this it can be seen that the capacity of an electrolytic capacitor is a direct function of the area of the anode member and that the thickness of the dielectric film is always automatically matched to the potential difference or voltage.

Digitized by Google Original from UNIVERSITY OF MICHIGAN

Structural Limitations

In actual practice it is true, although unfortunate, that the design of electrolytic capacitors is to a certain degree a series of compromises.

Electrolytes of low conductivity or high specific resistance exhibit low leakage current due to the lack of or rather the reduced number of ions but such electrolytes have the drawback that they increase the resistance effectively in series with the capacitor. This is illustrated by the following figure:

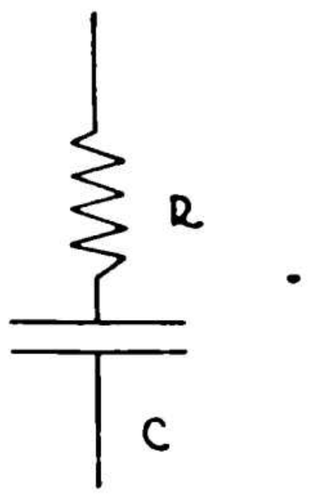

A compromise is therefore necessary and consists in fixing the permissible equivalent series resistance R and tolerating a corresponding value of leakage current. Fortunately, low values of leakage current can be obtained with comparatively low values of R.

Another compromise must, however, be made in relation to the voltage breakdown of electrolytic capacitors.

Sparking or breakdown occurs in an electrolytic capacitor when a certain critical voltage or potential difference is applied to it. This breakdown is analogous to the breakdown of the dielectric in other types of electrical capacitors.

Digitized by Google Original from UNIVERSITY OF MICHIGAN

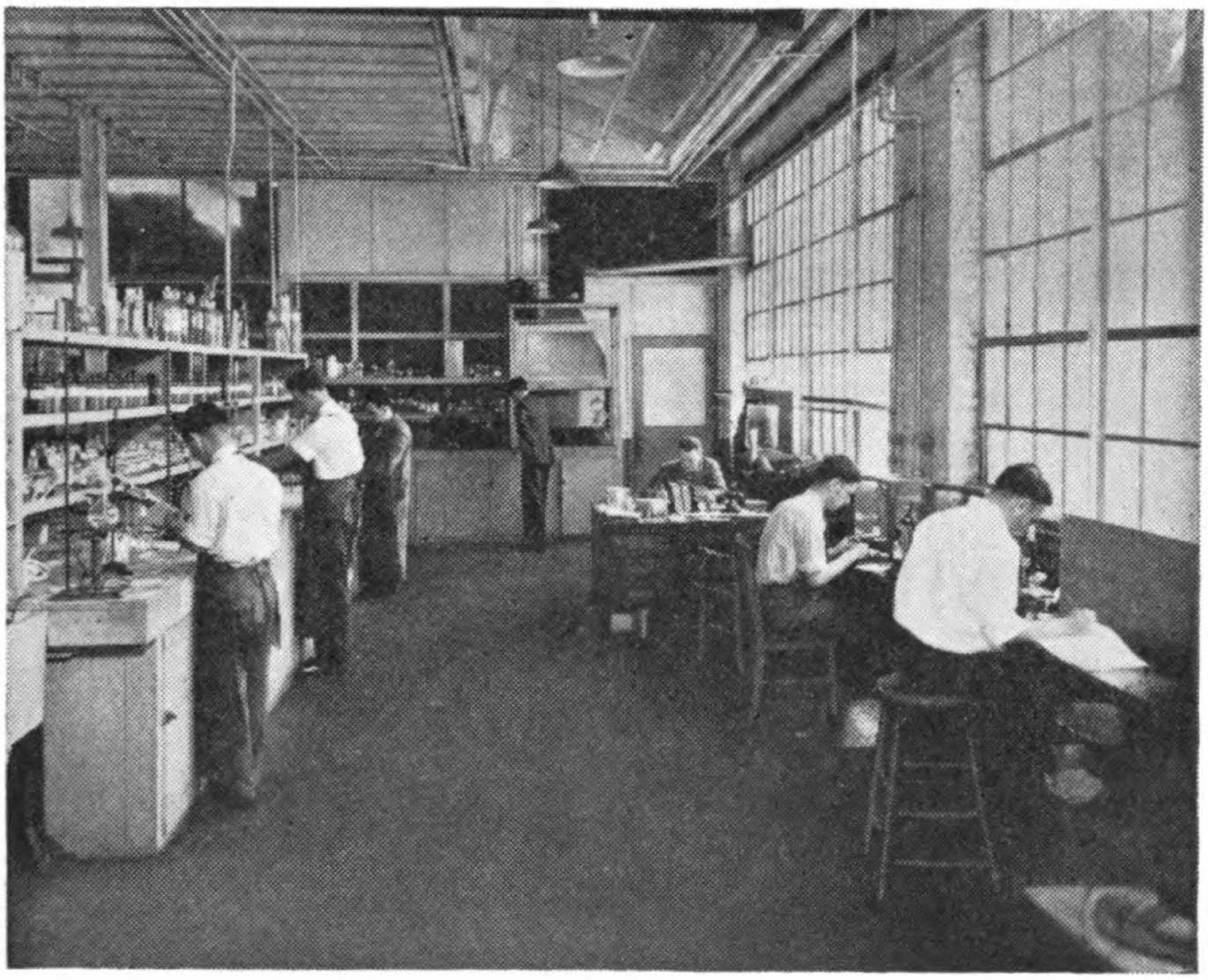

(*Courtesy Cornell-Dubilier Electric Corp.*)
Typical laboratory equipped for research work on electrolytic capacitors.

It has been observed that this sparking voltage V is determined by the specific resistivity r, of the electrolyte, and for a specific thickness of oxide film may be expressed as follows:

$$V = a \log r + b$$

Where a and b are constants.

The increase of V with r may be explained as follows: the greater the concentration of ions in the electrolyte, the greater will be the number of electrons emitted from the electrolyte and hence the greater the number of electrons migrating to the dielectric, and the more readily will breakdown occur.

Digitized by Google Original from UNIVERSITY OF MICHIGAN

In theory at least, electrolytic capacitors can be designed to have a very high breakdown voltage by simply making the specific resistivity r, of the electrolyte, sufficiently great. This again results in a large increase in the equivalent series resistance R; so again a compromise must be made.

Thus in the practical design of electrolytic capacitors there is a constant struggle to keep the value of R down, the leakage current at minimum values and the breakdown voltage at high values. It is doubted that the users of electrolytic capacitors ever appreciate the fact that such compromises have to be constantly made.

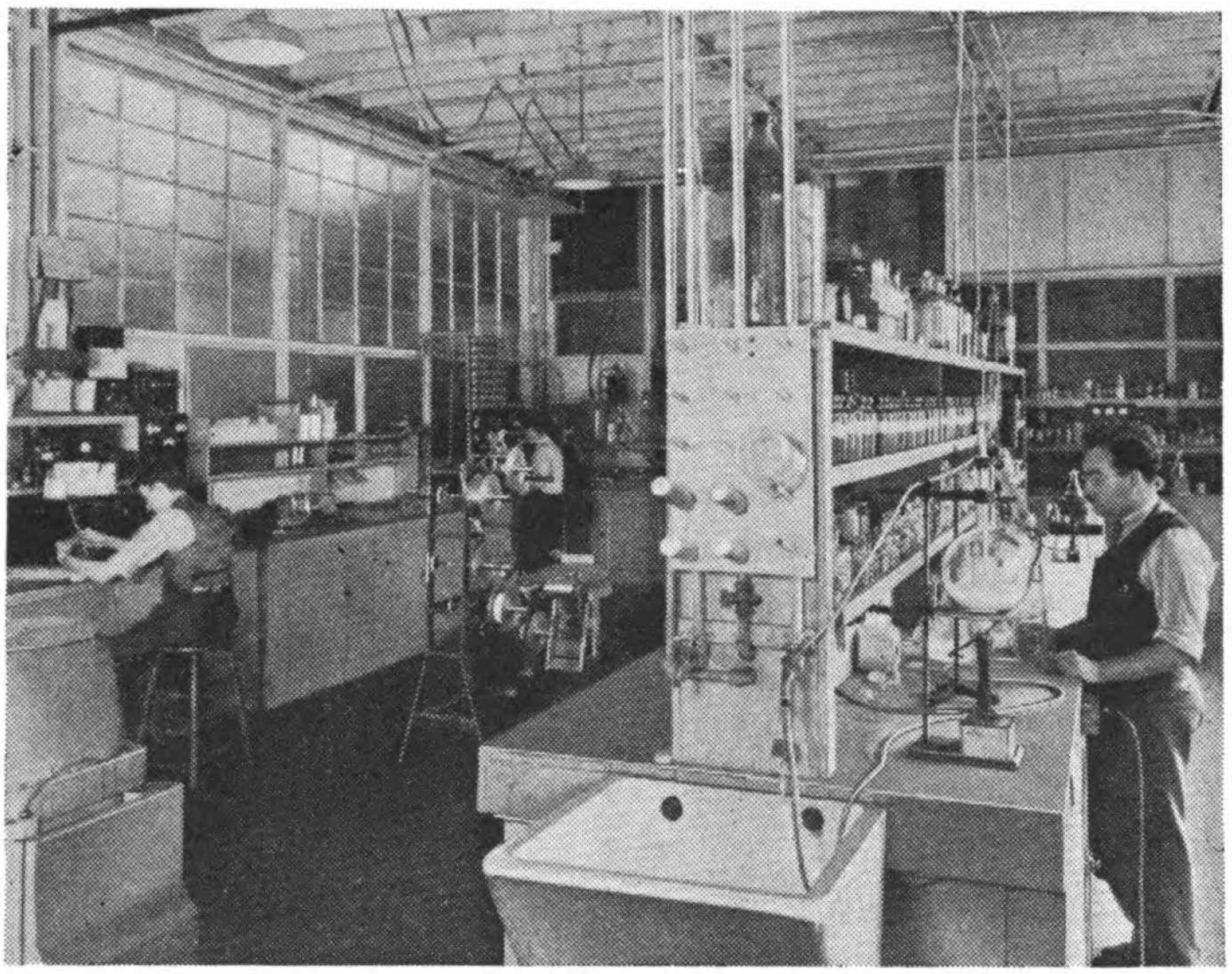

(Courtesy Cornell-Dubilier Electric Corp.)

Typical laboratory equipped for research work on electrolytic capacitors.

Digitized by Google Original from UNIVERSITY OF MICHIGAN

Chapter III

THE WET TYPE OF ELECTROLYTIC CAPACITOR

THE wet electrolytic capacitor is so designated because the electrolyte employed consists of an aqueous or liquid solution.

The electrolyte being a liquid, a liquid tight container must be employed to house the capacitor.

Wet electrolytic capacitors seem to have found commercial application and use as early as 1892 and were used at that time, in connection with single phase alternating current motors, for starting purposes.

Wet electrolytic capacitors intended for the more common application in power converter filter net works first began to be used, commercially, in 1921. Since that time continual improvements have been made in all essential characteristics but basically there have been few changes in design.

All wet electrolytic capacitors essentially consist of three parts; namely, a container filled with electrolyte into which is immersed an aluminum anode member.

Some six or seven years ago most of the wet electrolytic capacitors were contained in drawn, seamless cans of copper but in more modern practice the copper containers have been replaced with drawn or extruded, round seamless cans of commercial grades of aluminum.

Typical examples of present day constructions are shown in the following illustrations:

Digitized by Google Original from UNIVERSITY OF MICHIGAN

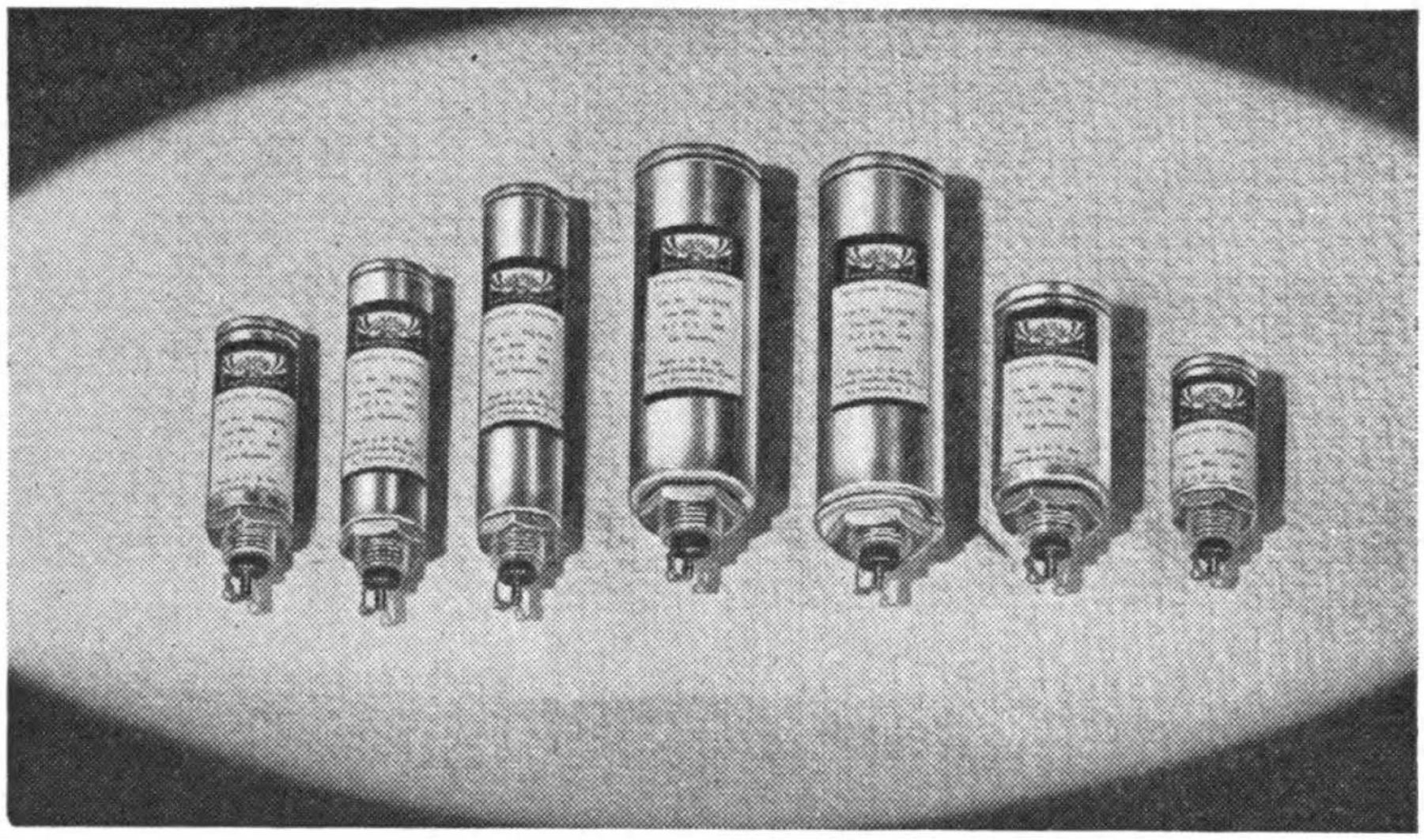

(Courtesy Cornell-Dubilier Electric Corp.)

Examples of standard wet electrolytic capacitors of various container diameters and lengths.

The internal construction of a typical wet electrolytic capacitor is shown in the following illustration.

From this illustration it can be seen that a complete wet electrolytic capacitor consists of the following parts:

1. The can or container
2. The can cover and venting mechanism
3. The anode plate
4. The anode plate support or riser rod.
5. The stem bushing
6. The solder lug terminal
7. The separator
8. The electrolyte

Digitized by Google Original from UNIVERSITY OF MICHIGAN

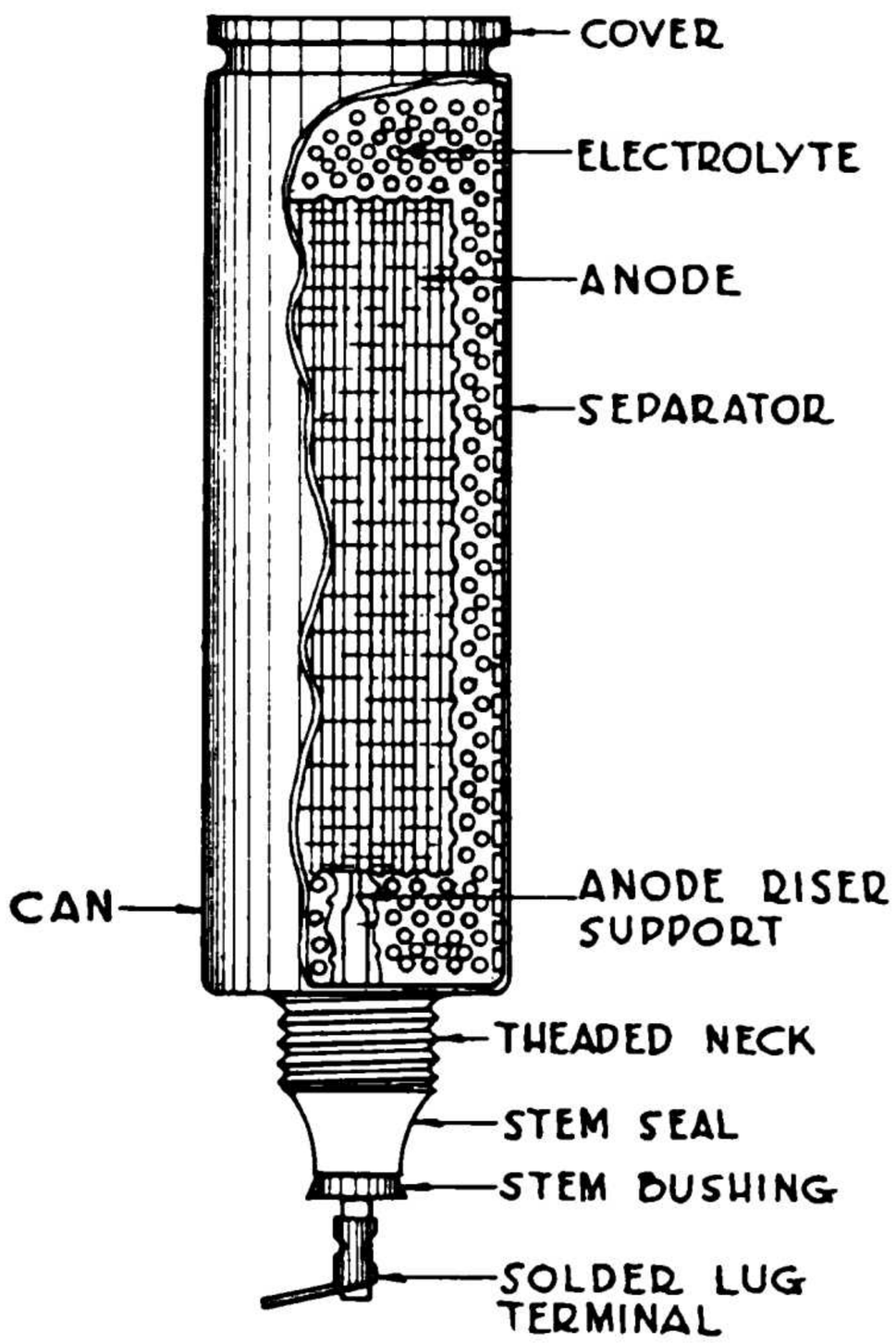

Containers

In present day practice, containers are drawn or extruded, seamless aluminum cans with or without a threaded neck extension. Some attempts have been made to use other metals than aluminum, particularly zinc, but so far aluminum has proved to be the most satisfactory material for both chemical and economical reasons.

Commercial aluminum, with an aluminum content of approximately 99.3%, is normally used for fabricating the containers.

Digitized by Google Original from UNIVERSITY OF MICHIGAN

When wet electrolytic capacitors are used under certain conditions, the inside surface of the containers is coated, by electroplating, with chromium. Sometimes, in place of the chromium plating, the inside surface of the container is roughened by chemical etching. The reasons for this special treatment of the inside container surface will be explained in detail in subsequent chapters.

In present day constructions of wet electrolytic capacitors, the sizes of containers have been fairly well standardized to the following body dimensions:

Outside Diameter	*Overall body length*
1"	1¾" to 4½"
1⅜"	2½" to 4½"
1½"	2½" to 4½"

Wet electrolytic capacitors, in operation, must always be mounted in a vertical or upright position, in order that the anode member be always submerged under the surface of the electrolyte. In the mounting of the container, two methods are used. The type of container which has a threaded neck portion is mounted with a nut while the type of container without the threaded neck portion is mounted with a ring type clamp or so-called mounting ring.

In most cases the threaded neck portion is an integral part of the container but in some cases this threaded neck is a moulded part of bakelite or hard rubber.

Digitized by Google Original from UNIVERSITY OF MICHIGAN

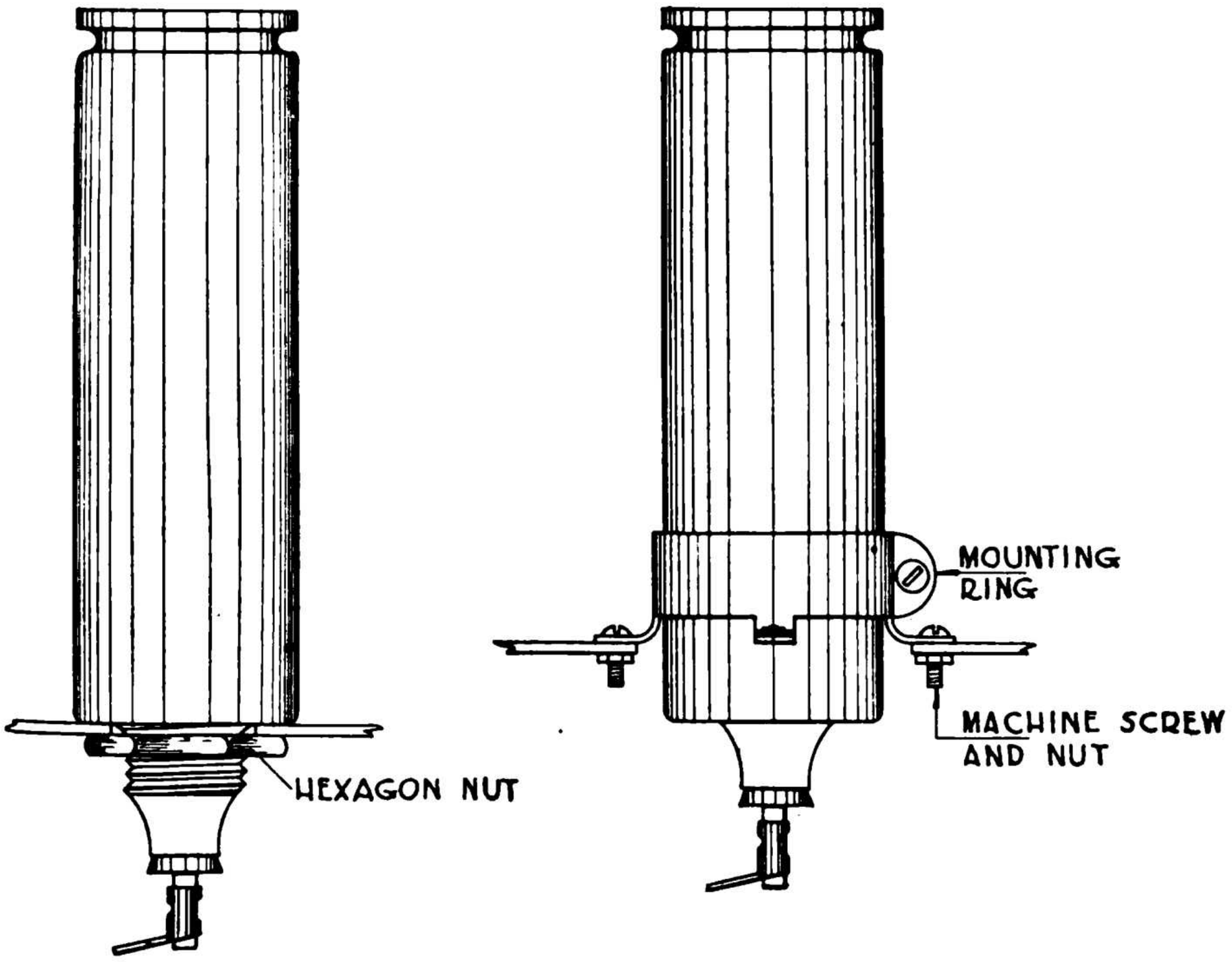

The size of thread, on the threaded neck containers, has been standardized as follows:

Outside Diameter	*Thread*
1"	5/8 - 18 threads per inch
1 3/8"	3/4 - 16 threads per inch
1 1/2"	3/4 - 16 threads per inch

Container Cover and Venting Mechanism

It is common practice to close the top of the aluminum containers with a cover of aluminum and this cover contains some means of allowing for the auto-

Digitized by Google Original from UNIVERSITY OF MICHIGAN

matic reduction of any increase in internal pressure built up inside the capacitor.

These covers are generally sealed by spinning either the cover into an indented recess in the container rim or by spinning the edge of the container over tight against the cover.

Some of the more common constructions are shown in the following illustrations.

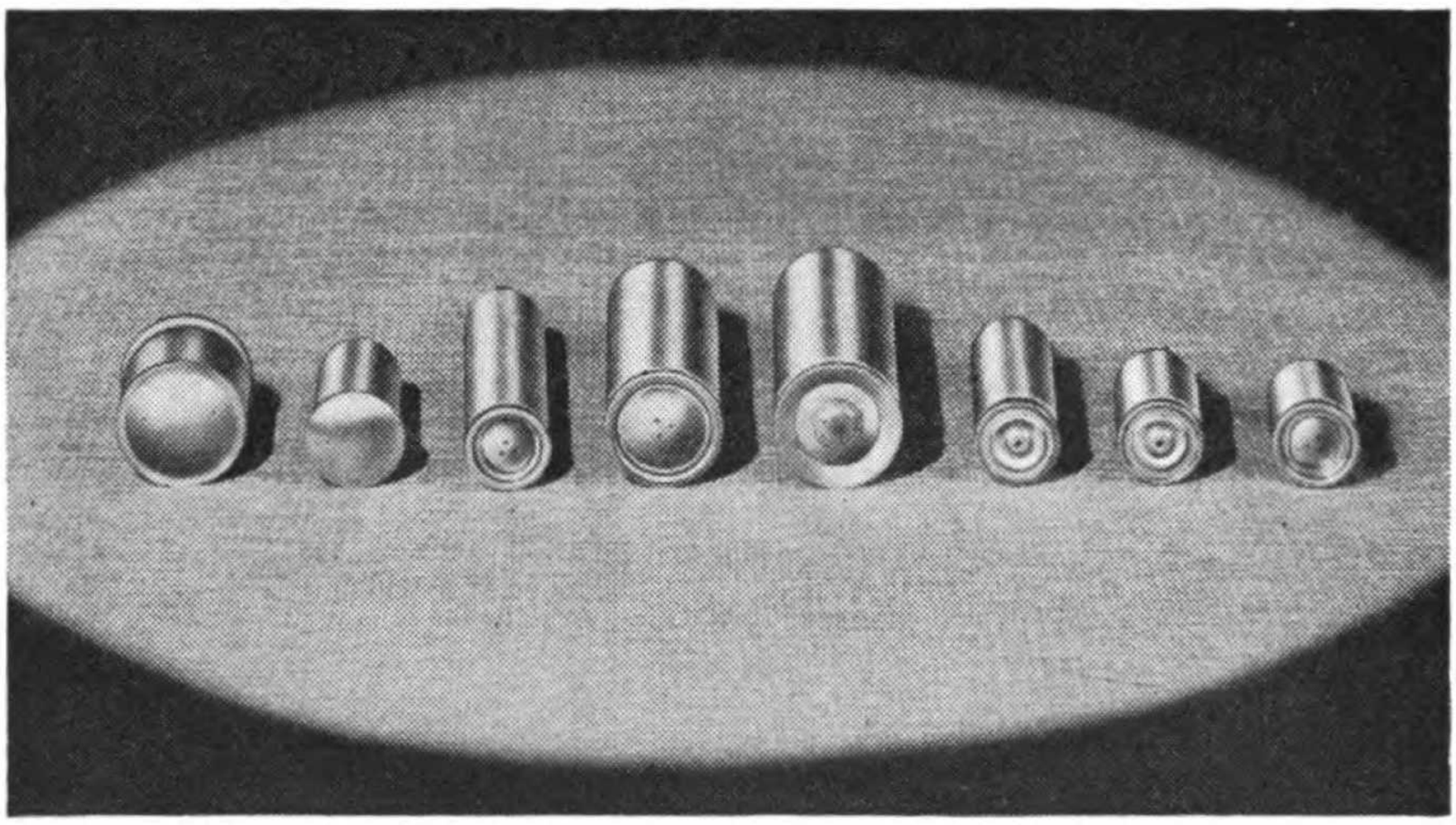

Vent and cover constructions used on typical wet electrolytic capacitors.

In the operation of a wet electrolytic capacitor a certain amount of gas is generated from the electrolysis of the electrolyte and unless means is provided for the purpose quite high pressures may be built up inside the container. For this reason it has been found necessary to provide the covers with some form of vent. In practically all instances this vent takes the form of a

Digitized by Google Original from UNIVERSITY OF MICHIGAN

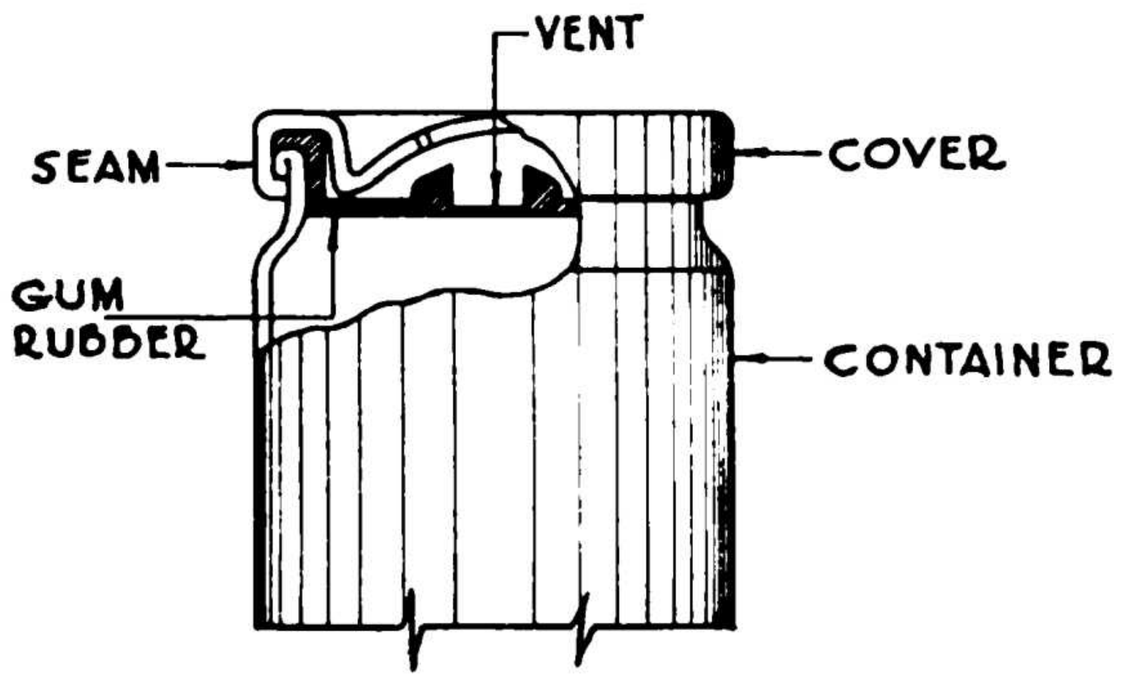

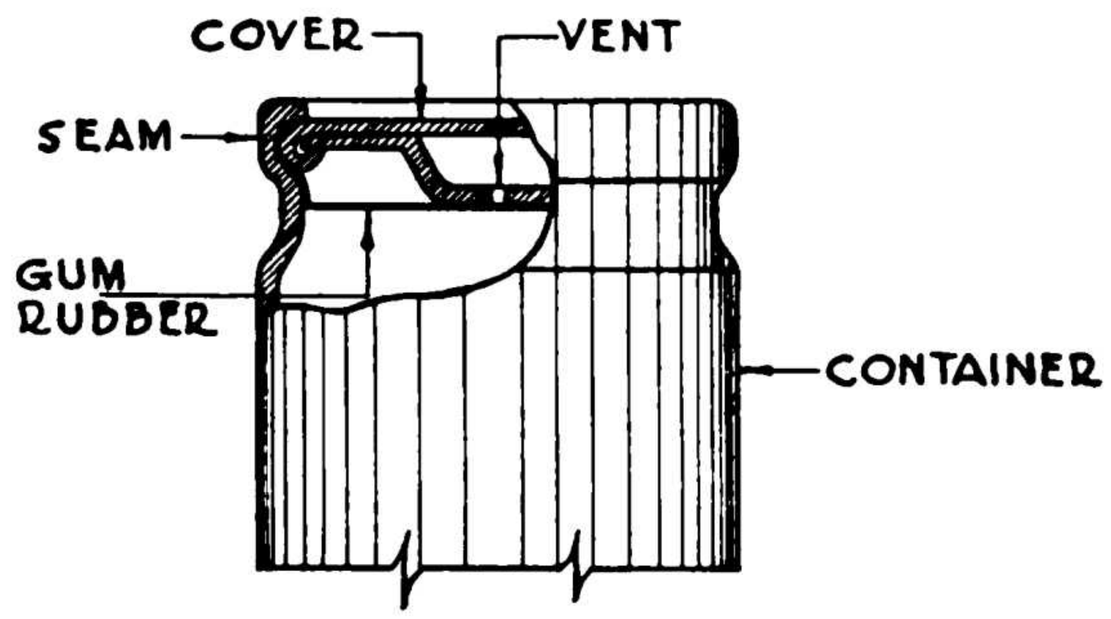

thin sheet of gum rubber which is perforated by a very small hole. The thickness of the rubber and the size of the perforation determine the pressures at which venting action will occur. In practice it is desirable to obtain venting action at the lowest pressure which will prevent actual leakage or escape of electrolyte through the perforation.

Anode Structures

Anode structures used in wet electrolytic capacitors take various forms. Among these are the coiled type, the accordion pleated type, the circular pleated type, the edgewise wound helical type and the cast spider or radial type. These various types are shown in the following illustrations:

Digitized by Google Original from UNIVERSITY OF MICHIGAN

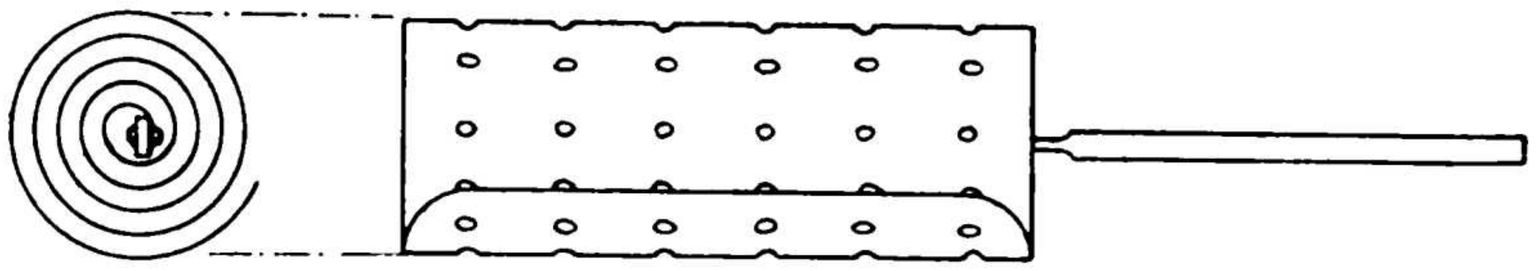

COILED TYPE



ACCORDION PLEATED TYPE

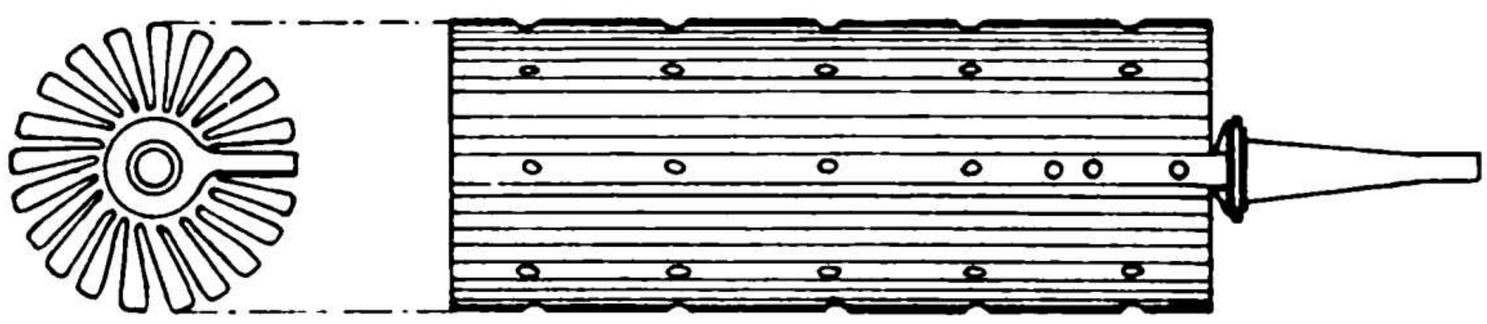

CIRCULAR PLEATED TYPE

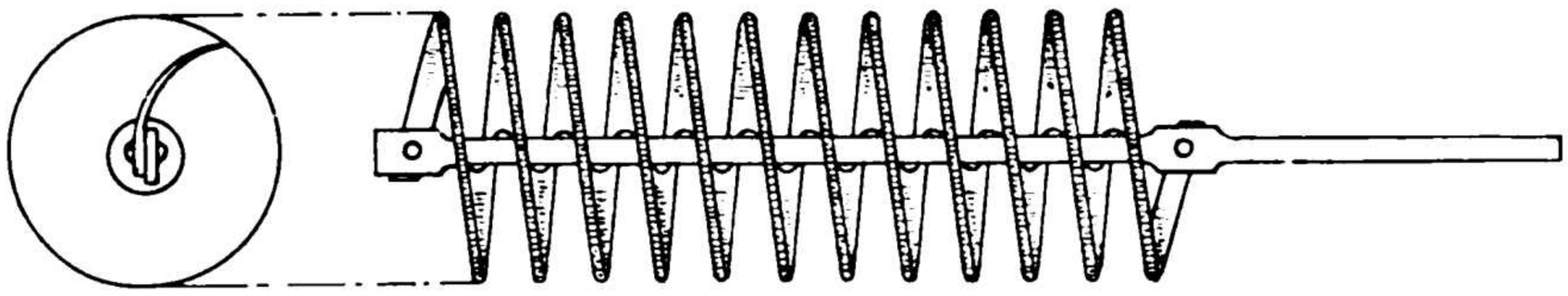

EDGEWISE WOUND HELICAL TYPE

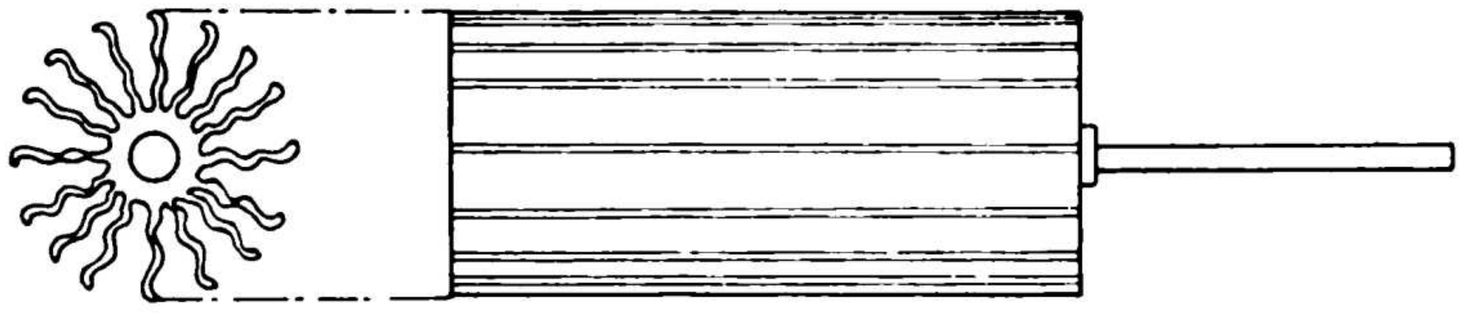

CAST SPIDER OR RADIAL TYPE

The coiled and accordion pleated types of anodes are the ones in most common use.

Both these types are fabricated from aluminum foil varying in thickness from 0.010″ for the coiled type to 0.005″ for the accordion pleated type.

Digitized by Google Original from UNIVERSITY OF MICHIGAN

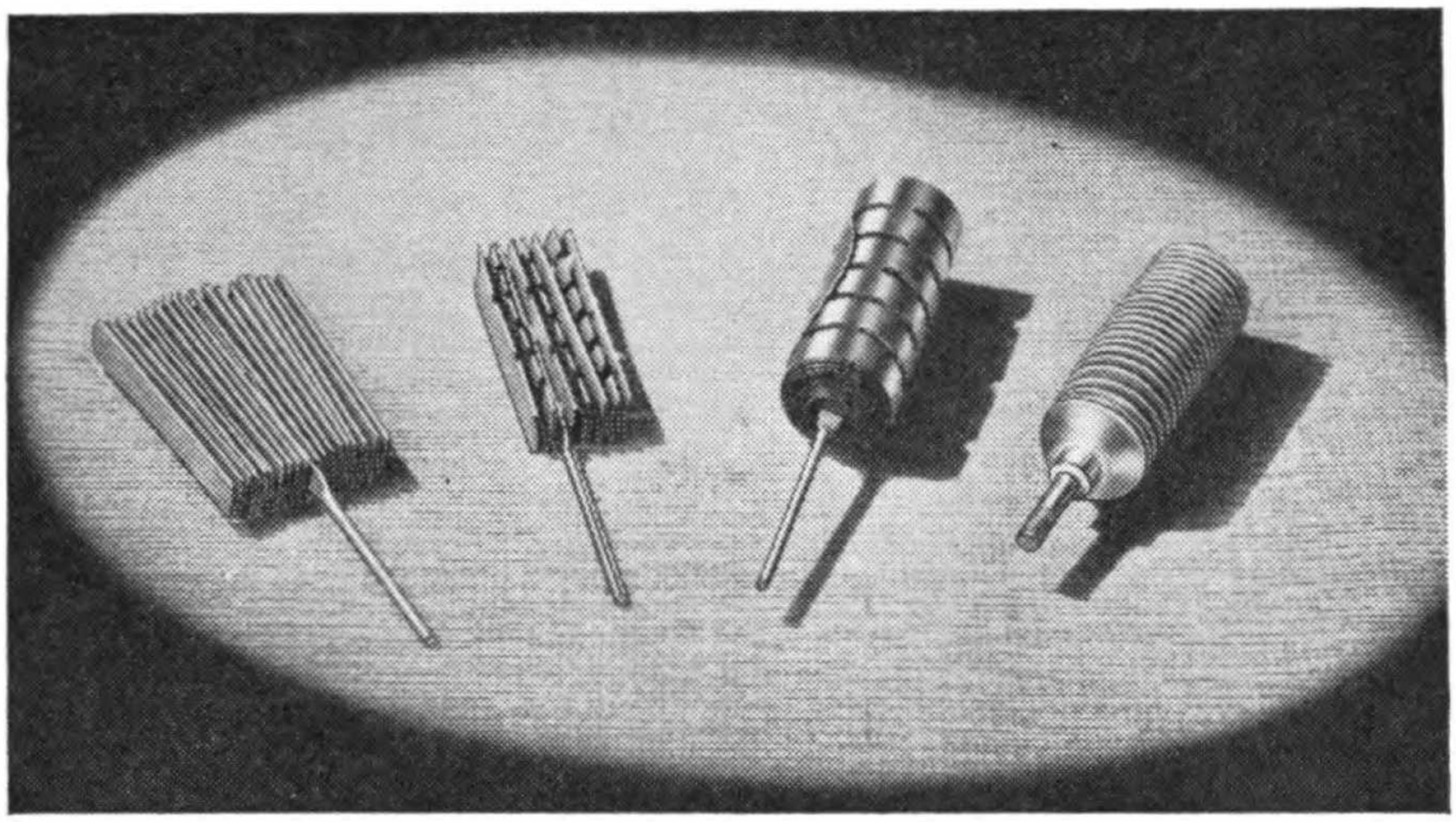

Anode assembly structures used in typical wet electrolytic capacitors.

The coiled type, circular pleated type and frequently the accordion pleated type anodes employ aluminum foil that has been perforated with either round holes or oblong slots. This is necessary to reduce the mean path, through the electrolyte, from anode surface to container wall. This of course reduces the resistance equivalently in series with the capacitor.

Anode structures are always fabricated of high purity aluminum of a minimum aluminum content of 99.8%. Higher purities of 99.85% to 99.99% are still more satisfactory and desirable but are less frequently used because of economical reasons. The detailed effects of impurities in anodic materials will be more fully covered in subsequent chapters.

Anode Plate Support or Riser Rod

The anodes are supported inside the containers by riser rods or supports of various types. The more

Digitized by Google Original from UNIVERSITY OF MICHIGAN

common type is a round aluminum rod with flattened sections which are perforated with holes through which rivets or eyelets pass for fastening the anode plate.

The more common forms of riser rods are shown in the following illustrations:

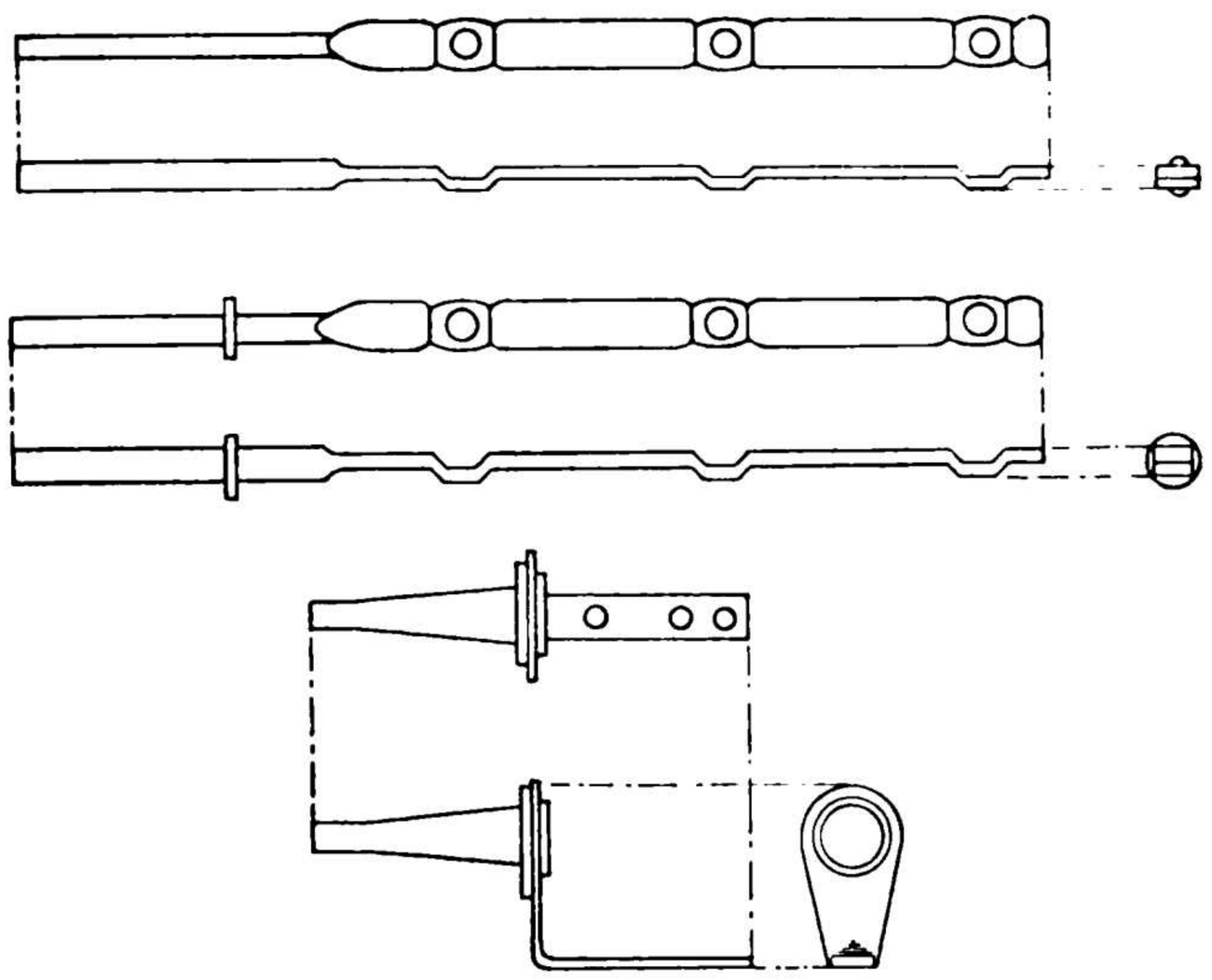

Riser rods must also be fabricated of aluminum of the same high purity that is required for the anode proper. This same also applies to any rivets or eyelets used for fastening the anode to the riser rod. It is understood why this is necessary when it is mentioned that all parts of the anode assembly, including riser rods, rivets or eyelets are parts of the anode proper and must therefore be equally capable of being coated with the dielectric film of aluminum oxide.

Stem Bushing and Seal

As the anode riser stem must pass through the bottom of the container and extend beyond for the pur-

Digitized by Google Original from UNIVERSITY OF MICHIGAN

pose of providing an electrical connection to the anode structure, it is obvious that the anode riser stem must be electrically insulated from the container and that a liquid tight seal must be provided to prevent the escape of any electrolyte. This insulating and sealing of the riser stem is accomplished by various methods, some of which are shown in the following illustrations:

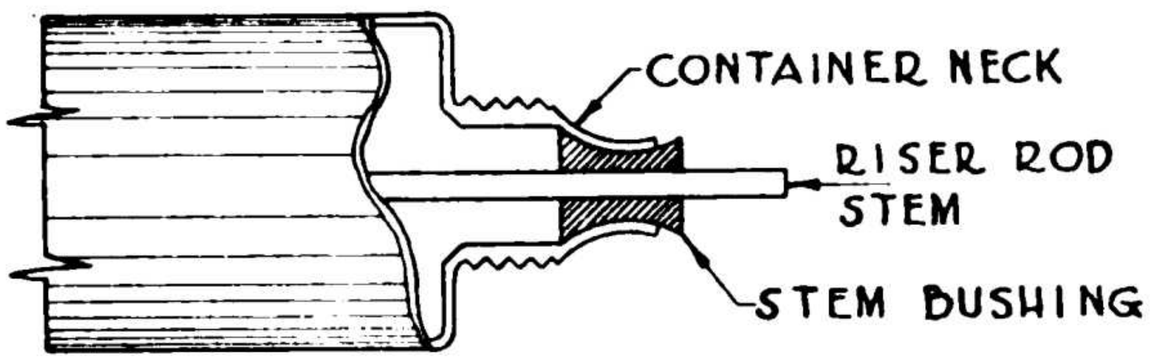

A

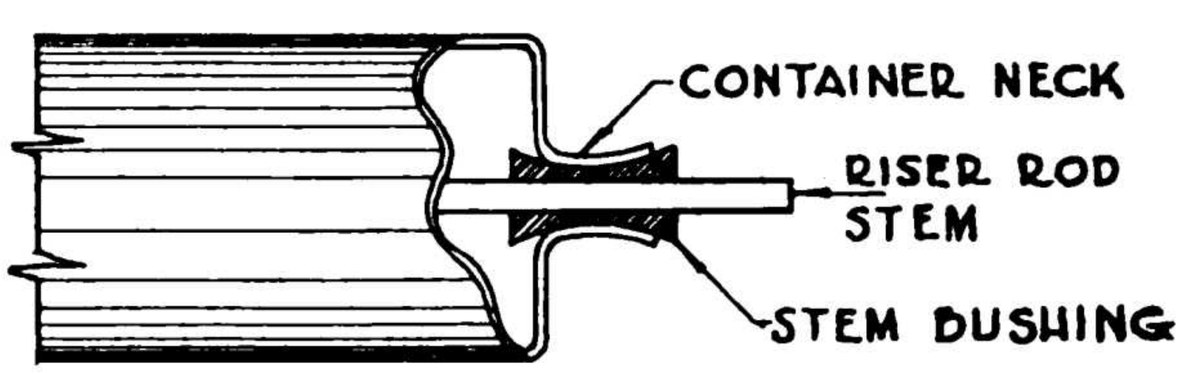

B

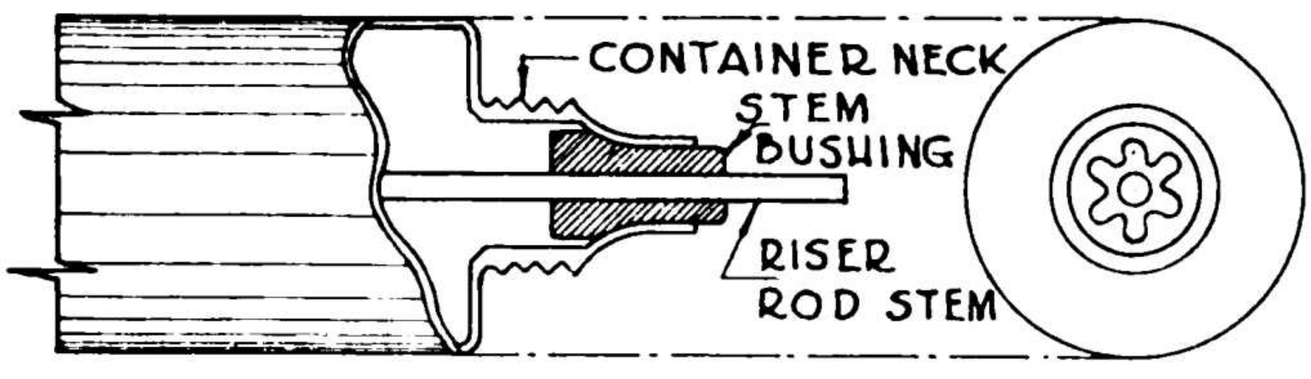

C

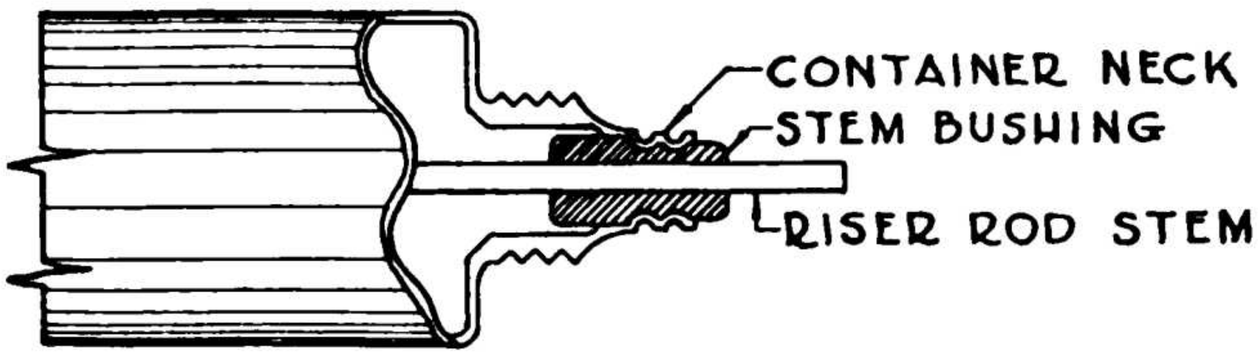

D

Digitized by Google Original from UNIVERSITY OF MICHIGAN

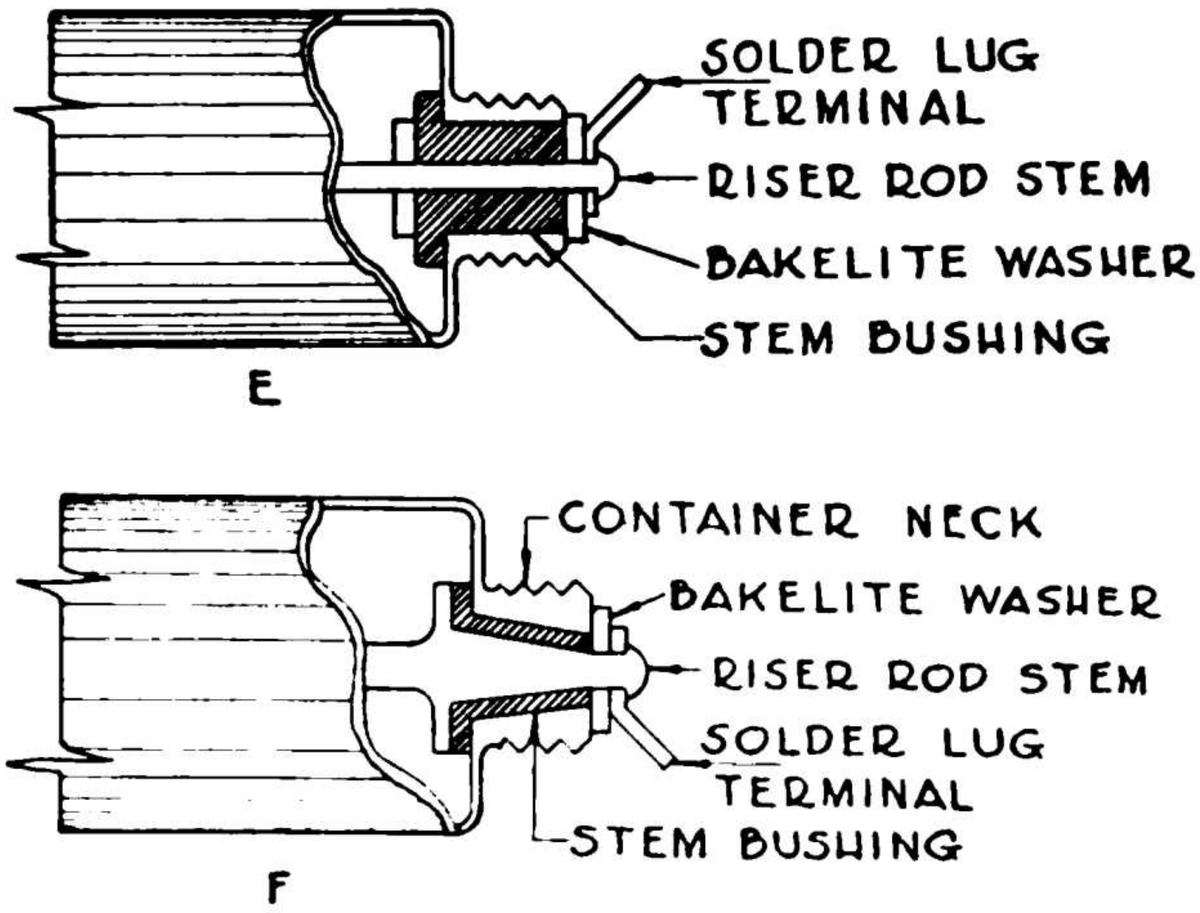

Figure A shows a construction in which the container neck is swaged or squeezed tight around the stem bushing.

Figure B shows the same type of construction using a container without a threaded neck portion.

Figures C and D are similar constructions but in the case of C the container neck is fluted in order to exert pressure on the stem bushing while D shows the use of small concentric rings or grooves spun into the container neck to accomplish the same result.

In figure E the riser rod is provided with a ring shoulder which in turn seats tightly against the stem bushing when the end of the riser rod stem is pulled outward and the end riveted over. The bakelite washer provides necessary insulation between the solder lug terminal and the end of the container neck.

Figure F shows a construction similar to figure E except the riser rod stem is tapered and the tapered portion fits snugly into a tapered stem bushing. A liquid tight seal results when the riser rod stem is pulled

Digitized by Google Original from UNIVERSITY OF MICHIGAN

out tight and the end riveted over against the solder lug terminal. A bakelite washer is also used here to insulate between the solder lug terminal and the end of the container neck.

While there are other types of constructions in general use, these which have been described, serve the purpose of giving a clear idea of the present day methods used.

Stem bushings are always made of pure gum rubber of extremely high chemical purity. If it is necessary, for mechanical reasons, to harden the pure gum stock, extreme care must be exercised in the selection of the proper filler materials.

It is imperative that the stem bushing material impart no impurities to the electrolyte, remain neutral to the electrolyte and maintain its original resiliency over a long period of usefulness.

Solder Lug Terminals

As all parts of the anode assembly must be of aluminum and the portion of the riser rod extending exterior to the container therefore also be of aluminum it is necessary to attach to this external portion of the riser stem a solder lug terminal of some sort. This obviously is necessary because electrical connections could not be very readily soldered or attached to aluminum.

In the cases where the end of the riser stem is spun or riveted over against an insulating washer on the end of the container neck, a standard solder lug terminal of tin or solder coated brass or copper may be used.

Digitized by Google Original from UNIVERSITY OF MICHIGAN

In the cases where the anode riser stem, however, projects straight from the stem bushing, in the form of a round aluminum rod, it is necessary to use a special type of solder lug terminal. For mechanical reasons it is necessary to fabricate this type of solder lug terminal of steel which in turn is hot solder coated to facilitate soldering. A typical type of solder lug terminal of this class and the method of its fastening to the riser stem is shown in the following illustration:

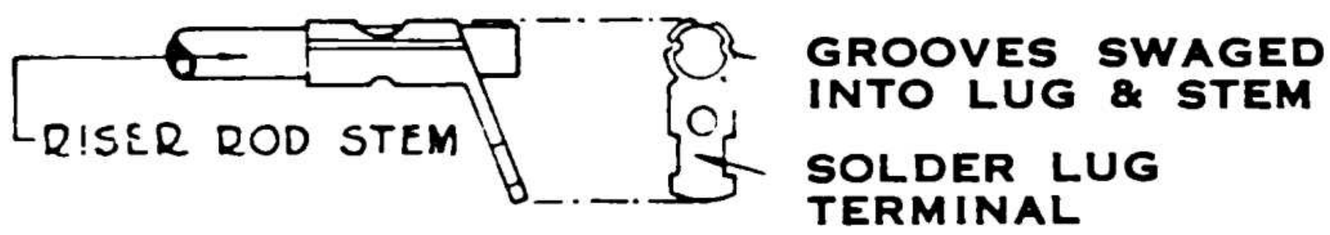

The Separator

As most anode assembly structures are not exactly held rigidly fixed in position inside the containers it is necessary to provide means of preventing the anode from touching the inside container wall. This is accomplished by lining the inside of the container with a layer of hard rubber or celluloid. This separator is made in the form of a finely perforated sheet and it is highly important that the percentage of total open space be large in comparison to the total amount of material. This is important because the more the separator material covering the inside surface of the container the less the amount of inside container surface is contacted by the electrolyte. Obviously the type of perforation has a direct bearing on the equivalent series resistance obtained in a given capacitor structure.

In past years a thin perforated and corrugated

Digitized by Google Original from UNIVERSITY OF MICHIGAN

sheet of celluloid was used, generally, as a separator material but in recent years, hard rubber has completely replaced the use of celluloid. Two main reasons for this change have been economy and the fire hazard always present with the use of celluloid.

Hard rubber used as a separator material must be of exceedingly high chemical purity and be initially fabricated with as low a sulphur content as is possible.

The Electrolyte

The electrolytes employed in wet electrolytic capacitors may be divided into two general classifications; namely, the straight aqueous type and the polyhydric alcohol type.

Normally, the aqueous type, consisting of an aqueous solution of boric acid and ammonium or sodium borate, is employed. In special cases where capacitors are required to have better than normal temperature characteristics an electrolyte consisting of distilled water, boric acid, ammonium borate and either a glycerol or glycol is employed. The electrolyte containing either a glycerol or glycol will not freeze at temperatures at which the straight aqueous electrolytes solidify and therefore the capacitors are rendered operative over a much increased temperature range.

More complete details on electrolytes of both types will be given in subsequent chapters.

Digitized by Google Original from UNIVERSITY OF MICHIGAN

Chapter IV

THE FABRICATION OF WET ELECTROLYTIC CAPACITORS

Anodes—Plain and Etched Types

As has been previously mentioned, the capacity of an electrolytic capacitor is determined by the area of the anode surface and the thickness of the dielectric film covering this surface. That being the case it becomes apparent that an increase in capacity can be obtained if the surface of a given size of anode is increased by roughening the plain surface. It is also apparent that the increase in capacity thus obtained will be in direct proportion to the increase in effective surface area by such a roughening procedure.

Capacitors fabricated with a plain surface anode structure are called plain foil capacitors and capacitors fabricated with a roughened surface anode structure are called etched foil capacitors.

The majority of present day wet electrolytic capacitors employ the use of etched surface anode structures.

A number of methods have been developed for the roughening of the anode surface and such methods include sand blasting, mechanical embossing, scratching with rotating brushes, use of abrasive materials, forming in rotary dies and chemical etching with acids and salts of acids.

Digitized by Google Original from UNIVERSITY OF MICHIGAN

Most of the mechanical roughening methods present certain difficulties and disadvantages and some of these will be briefly described.

Sand blasting of the anode surface produces only a comparatively small increase in surface area. Sand particles are embedded in the surface which are difficult of subsequent removal. Also, if thin foil or sheets of aluminum are sand blasted, the hammering action of the sand particles tends to make the aluminum very hard and brittle.

Mechanical embossing also has the disadvantage of a comparatively small increase in surface area and in addition, the increase in surface area is obtained at the expense of an increase in thickness of the embossed material.

Scratching of the anode surface with rotating brushes with metallic bristles will increase the surface area but the increase thus gained will be non-uniform, of small magnitude and small metallic particles from the brush bristles will be embedded in the anode surface. These embedded particles are very difficult of subsequent removal.

A fairly satisfactory method, of mechanically roughening the anode surface, has been developed whereby the anode material is passed through a series of rotating copper rollers. An abrasive such as aluminum oxide is fed to these copper rollers. The abrasive particles become embedded into the surface of the comparatively soft copper and in turn cut deeply into the surface of the anode material. By this method, increases in the anode surface area of from two to two and a half times have been obtained.

Digitized by Google Original from UNIVERSITY OF MICHIGAN

Increases in anode surface areas of the same order of two and one half times have also been obtained by passing the aluminum, in the form of thin sheets or plates, through massive steel rollers which have been finely grooved with concentric rings. In this process the aluminum is actually drawn or formed to fit the groove pattern with the result that it assumes a shape similar to that illustrated below, obviously in magnified form of a cross-sectional view:

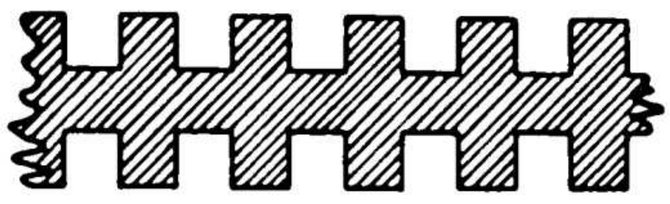

Of all proposed and known methods of roughening of the anode surface, the chemical etching processes have been found to be most satisfactory and are therefore in general use, in one form or another.

Chemical Etching of Anodes

The characteristic change in surface structure, of aluminum, effected by etching is not readily visible to the naked eye, and it requires a highly perfected technique to show these changes. For that reason a special effort will be made to show just what happens when aluminum surfaces are etched for use in electrolytic capacitors.

The manner in which various reagents etch aluminum is usually characteristic of the specific etching agent; in general, however, alkalies tend to attack aluminum surfaces uniformly, whereas certain of the acid reagents have a definite roughening action. Etching

Digitized by Google Original from UNIVERSITY OF MICHIGAN

with alkalies, therefore, reduces the thickness of the anode material uniformly with only a minor increase in effective surface area. Hydrochloric acid singly or in combination with metallic salts of hydrochloric acid, however, has a pronounced roughening action on aluminum, and the result of this roughening action is to increase the anode surface area.

Aluminum exposed to the air always has a thin film of oxide on its surface. In the event that annealed foil is used for anode structures, this oxide film may be increased slightly in thickness by the heating incident to annealing. The full roughening action of the hydrochloric acid reagents cannot become effective until this oxide film is penetrated. As a result, the most effective way of etching aluminum foil is to first remove the oxide film by the uniform attack of an alkali, such as sodium hydroxide. Sodium hydroxide is best used hot and in concentrations of from 4 to 10 per cent. The time of immersion can best be determined by experiment, but should only be long enough to remove the surface film without any material loss of metal.

Following etching with sodium hydroxide and washing, the foil can be immersed in a hydrochloric acid reagent of a number of types. Here the important variables are found to be the concentration of the reagent, the temperature of the reagent and the time of immersion. The characteristics of the aluminum sheet or foil are also important in determining the results obtained by etching. For best results, the foil should be especially fabricated for etching. There is a definite relation between the crystal structure of the metal and the effectiveness of the etching. It has been found, for

Digitized by Google Original from UNIVERSITY OF MICHIGAN

example, that aluminum, annealed to a high temperature, has a more coarse grain structure than aluminum annealed for a long period of time at a lower temperature. Hard drawn aluminum does not etch as satisfactorily as dead soft aluminum and the coarser grain structures produce the best results.

The purity of the aluminum also has a marked effect on etching results; aluminum of a purity of 99.99% will be hardly affected by the same procedure which produces full effective etching of aluminum of a purity of 99.8%. It might be mentioned in passing, that full advantage is taken of this fact in obtaining an accurate method of quickly checking for total aluminum content of aluminum foil.

Etching of aluminum foil brings with it the important problem of removing all traces of chlorides and other contaminating substances, such as heavy metals, from the surface. Metals such as iron and copper plate out electrolytically on the aluminum and must be later removed. This is invariably accomplished with treatment with nitric acid. More detailed data on the subject of removal of chlorides and heavy metals will be mentioned in connection with specific etching procedures.

Straight Hydrochloric Acid Etching

Illustrative of the results and effects of variations in acid concentration, acid temperature and time of immersion, in connection with the use of straight hydrochloric acid for etching, the following observations are made:

Digitized by Google Original from UNIVERSITY OF MICHIGAN

HCl	*Temperature*	*Time of Etch*	*Surface Increase*
5%	30° C.	5 minutes	1.3 times
5%	65° C.	1.5 minutes	2.9 times
8%	30° C.	5 minutes	1.8 times
8%	65° C.	1.5 minutes	5.0 times
11%	30° C.	5 minutes	2.8 times
11%	65° C.	1.5 minutes	6.0 times

In obtaining the above data three etching solutions were used; namely, 5, 8 and 11% of hydrochloric acid. The concentrated acid contained 37 per cent HCl and the solutions contained approximately 11.4, 18.2 and 25.1 per cent, by volume of the concentrated acid.

It will be noted that temperature plays an important part in determining the amount and rate of attack. It has been determined, by microscopic examination of cross-sectional areas, that temperature also has an important effect in controlling the character of the attack.

In comparing the above figures, there is obviously more roughening of the surface when the acid solution is used at a temperature of 65° C. than at a temperature of 30° C. There is, however, a deeper penetration in the longer time employed with the lower temperature solution. It has been observed that this deeper penetration takes the form of minutely small, hair like, capillary pits which penetrate deeply beneath the foil surface. The chlorides contained in these capillary pits are almost impossible of removal.

For the above reasons, the more uniform attack, with the least amount of the extra deep penetrations,

Digitized by Google Original from UNIVERSITY OF MICHIGAN

forms the most desirable character of etch. This limits the procedure very definitely to the use of hot solutions of sufficient concentration to obtain the desired increases in surface area.

The effect of variation in time of immersion is shown graphically in the following illustration:

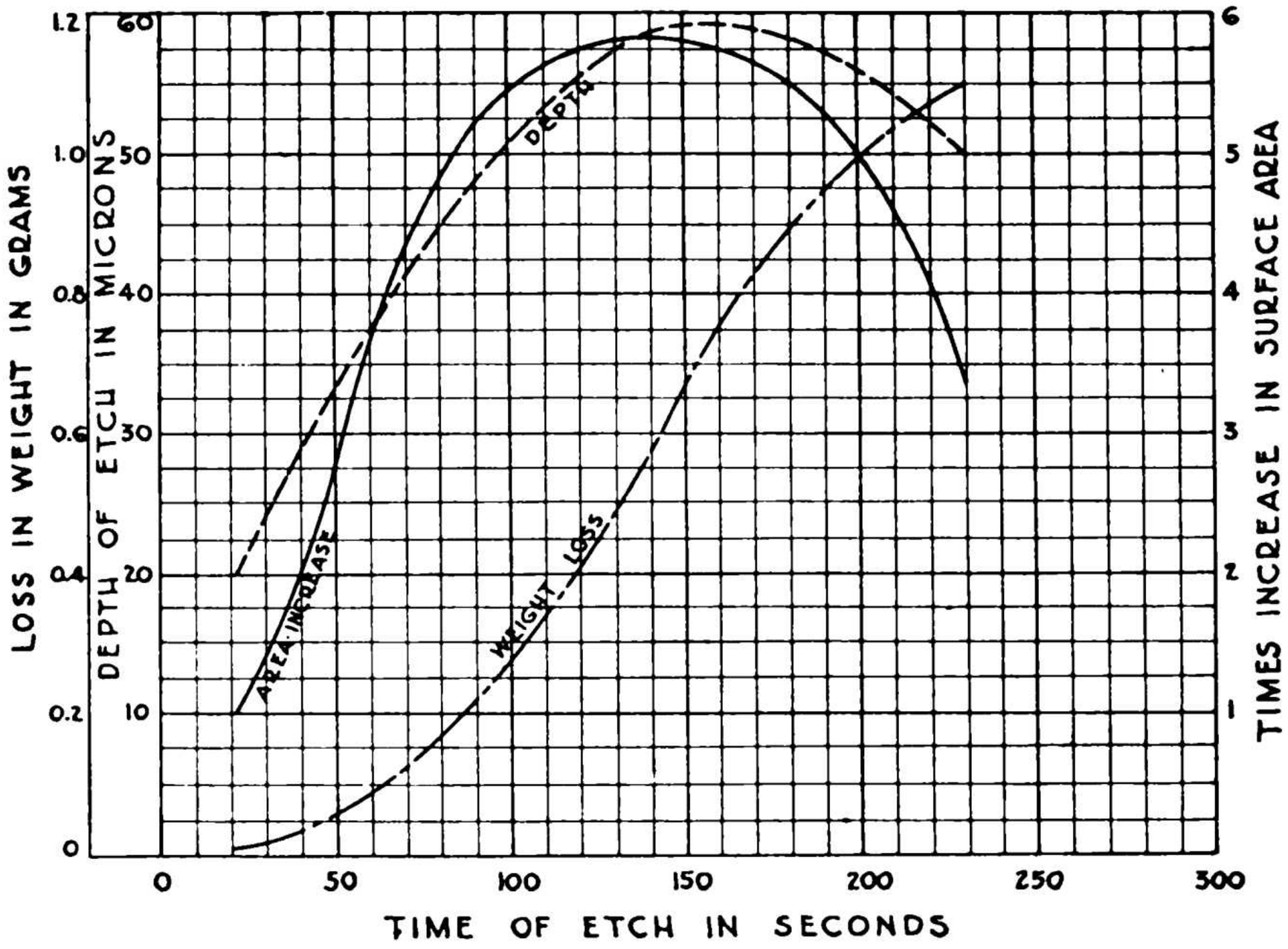

This graphically illustrated data is based on the results obtained with an anode plate 0.005" thick by 2" wide by 5" long. Prior to immersion in the etching solution, the anode plate was cleaned for three minutes at 90° C. in a 3 per cent solution of sodium hydroxide then washed in cold tap water.

The etching solution consisted of 10.8 per cent of HCl maintained at an etching temperature of 65° C.

Digitized by Google Original from UNIVERSITY OF MICHIGAN

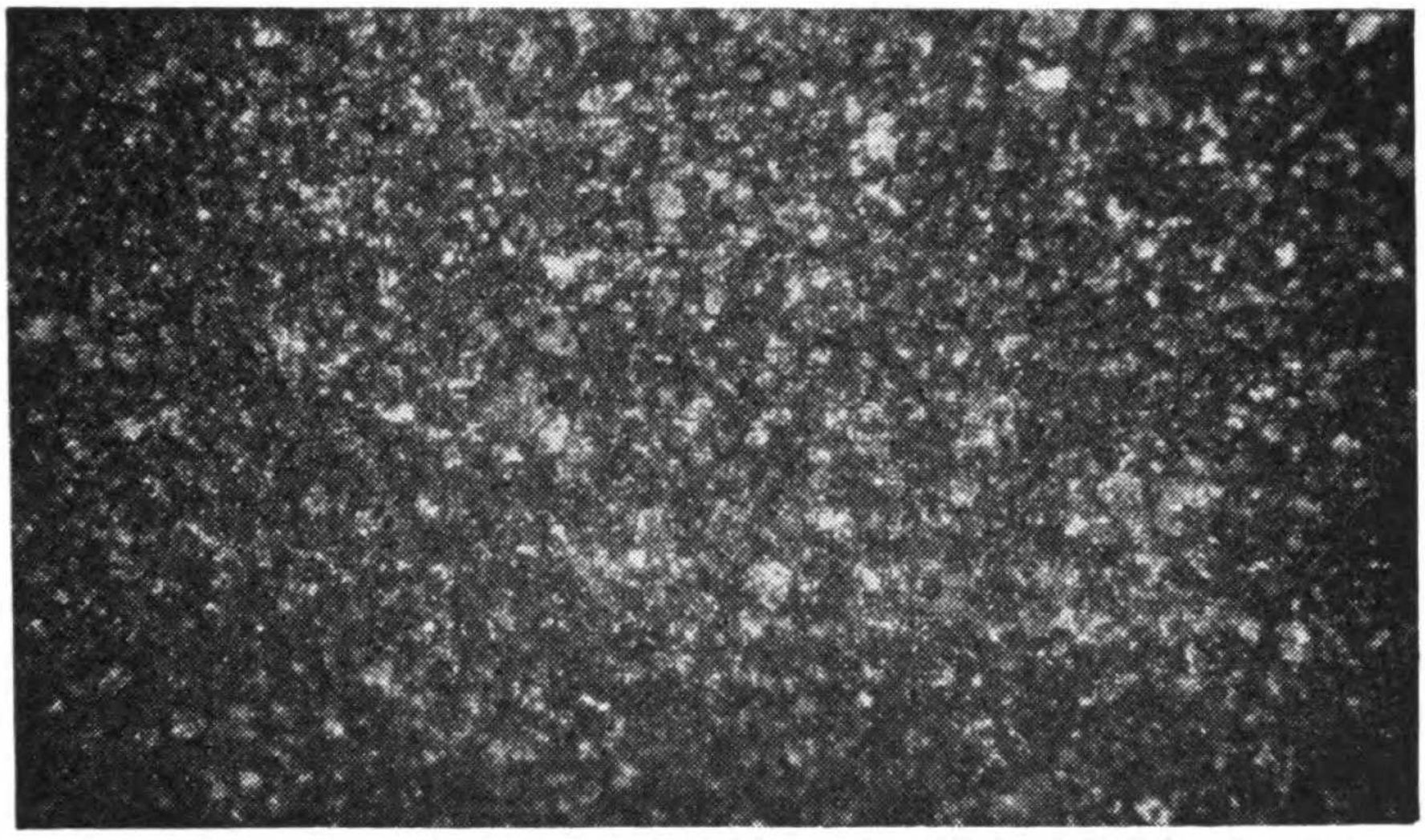

Photomicrograph of hydrochloric acid etched anode foil. Magnification 50 times.

Copper Chloride—Hydrochloric Acid Etching

It has been observed that comparatively small additions of copper chloride, iron chloride or aluminum chloride to the hydrochloric acid solutions produce an accelerating action in the attack of the aluminum surface.

A typical example of the use of such a fact is contained in the following tabulated data which shows the variation in surface area increase with time of immersion in etching solution.

Prior to etching, anodes were cleaned for 3 minutes at 90° C. in a 3 per cent solution of sodium hydroxide then washed in cold tap water.

Digitized by Google Original from UNIVERSITY OF MICHIGAN

Etching solution consisted of the following:

HCl .....100 c.c.
$CuCl_2$ ..... .05 grams
H_2O .....400 c.c.
Etching temperature .....75° C.

Etching Time	*Increase in Surface Area*
15 seconds	2.4 times
30 seconds	2.5 times
60 seconds	2.7 times
90 seconds	3.3 times
120 seconds	3.7 times
150 seconds	3.8 times
180 seconds	4.0 times

Copper Chloride Etching

If a piece of aluminum foil is immersed in a solution of copper chloride, consisting of approximately 5% of $CuCl_2$ dissolved in an aqueous solution, immediate action at room temperatures will be obtained. It will be noted that the surface of the aluminum will be rapidly coated with a fairly heavy layer of copper.

If, after a short immersion, the aluminum is removed, rinsed with tap water and treated with concentrated nitric acid to remove the copper coating, the surface will be found to have been very effectively etched. This type of etch readily produces increases in surface areas of five times or more.

The amount of copper plated out of the copper chloride etching solution onto the surface of the aluminum is rather large and must be replaced for subsequent etching operations.

Digitized by Google Original from UNIVERSITY OF MICHIGAN

A complete step by step, diagrammatic presentation of this process follows.

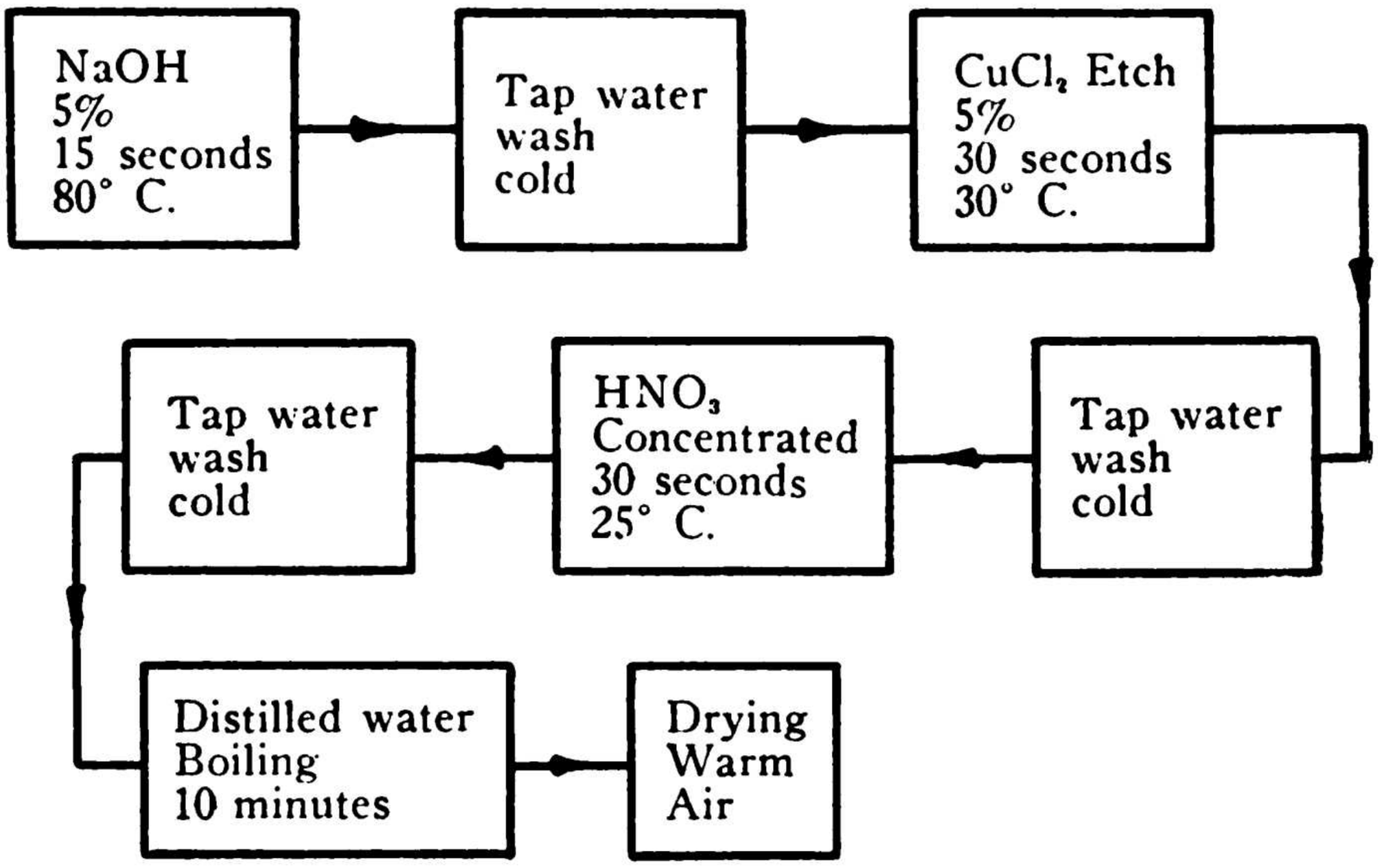

While there are other detailed methods of etching anodes intended for use in wet electrolytic capacitors, these other methods are all variations or combinations of the basic methods already described and for that reason it is not believed to be necessary to go into the multitudinous ramifications of these basic chemical etching methods.

Digitized by Google Original from UNIVERSITY OF MICHIGAN

Chapter V

FORMATION OF ANODIC FILMS

Preparatory Cleaning of Anode Assemblies

PRIOR to the formation of the dielectric film of aluminum oxide on the surface of the anode, the entire anode assembly must be cleaned of all traces of any contaminating or foreign materials which might affect the actual formation of the dielectric film or subsequently affect the performance of the finished capacitor.

The chemical cleaning of plain surface anodic material requires a certain technique but this does not suffice for the proper cleaning of etched surface material. For that reason, cleaning methods will be divided into those applying to plain and etched surfaces.

As the majority of wet electrolytic capacitors employ anode assemblies fabricated from either hard or soft aluminum sheet or foil varying in thickness from 0.003″ to 0.010″, cleaning methods will be confined to anode material of that nature.

Aluminum foil comes from the mill in the form of rolls and the surface of the material is perfectly smooth with a bright mirror-like finish, but the surface is generally covered with a thin film of oil or other lubricant which has been used in the rolling mill operations. This is particularly true of hard foil which obviously does not pass through any annealing operation. Soft foil which has been annealed after the last rolling mill

Digitized by Google Original from UNIVERSITY OF MICHIGAN

operation, as a rule, has lost almost all of the surface lubricant by vaporization due to the heat of annealing.

Some fabricators of aluminum foil incorporate washing operations in lubricant solvents to remove such surface materials but all aluminum foil, intended for use as anode members, in wet electrolytic capacitors, must be thoroughly cleaned before the dielectric film is formed.

Considerable improvement has been noted in recent years, however, in the surface condition of aluminum foil, fabricated especially for use in electrolytic capacitors. This improvement has, in the main, been obtained by the elimination of the use of mineral oils and the substitution of vegetable oils such as palm or cocoanut oils as the lubricating mediums in rolling mill operations. As the vegetable oils will saponify readily with various alkali cleaning agents much better surface cleaning is therefore obtained.

Cleaning of Plain Surface Aluminum Foil

In the cleaning of plain surface aluminum it is essential that all surface impurities such as oil, grease and traces of heavy metals such as iron and copper be removed. This should be accomplished, however, with the minimum of etching action or attack on the surface by the cleaning agents. The most common method of obtaining a thorough cleaning is the immersion of the aluminum in an alkali solution such as sodium hydroxide. While such a solution may very satisfactorily remove oil and dirt, the preferential dissolving action may leave, on the surface, small amounts of iron and

Digitized by Google Original from UNIVERSITY OF MICHIGAN

copper and it therefore becomes necessary to follow the treatment in sodium hydroxide with an immersion of the aluminum in nitric acid.

For simple cleaning of the aluminum surface with only mild etching trisodium phosphate (Na_3PO_4) is a comparatively effective reagent. Here also the treatment must be followed by an immersion in nitric acid.

The etching action of alkalies, particularly the phosphates and carbonates, can be minimized without interfering with the cleaning action by adding an inhibiting agent such as sodium silicate in an amount equal to approximately 5 per cent of the weight of alkali used.

In some cases the aluminum surface may be coated with a layer of mineral oil that cannot be readily removed with the caustic solutions. In such cases it may become necessary to first wash the material in such solvents as benzol, alcohol or trichlorethylene as a preliminary treatment.

One excellent cleaning method involves the immersion of the aluminum in a solution consisting of concentrated sulphuric acid and potassium dichromate. Such a combination affords an extremely strong oxidizing reagent which has no appreciable effect on the aluminum surface as long as the water content of the solution is negligible. This solution effectively removes all carbon compounds and at the same time seems to coat the surface of the metal with a very thin protective film of desirable characteristics.

Of all the cleaning methods known, the potassium dichromate-sulphuric acid one produces the most desirable results.

Digitized by Google Original from UNIVERSITY OF MICHIGAN

Apparently, there are three basic types of cleaning procedures which produce comparative results and illustrative of these are the following block diagrammatic presentations.

Sodium Hydroxide-Nitric Acid Method

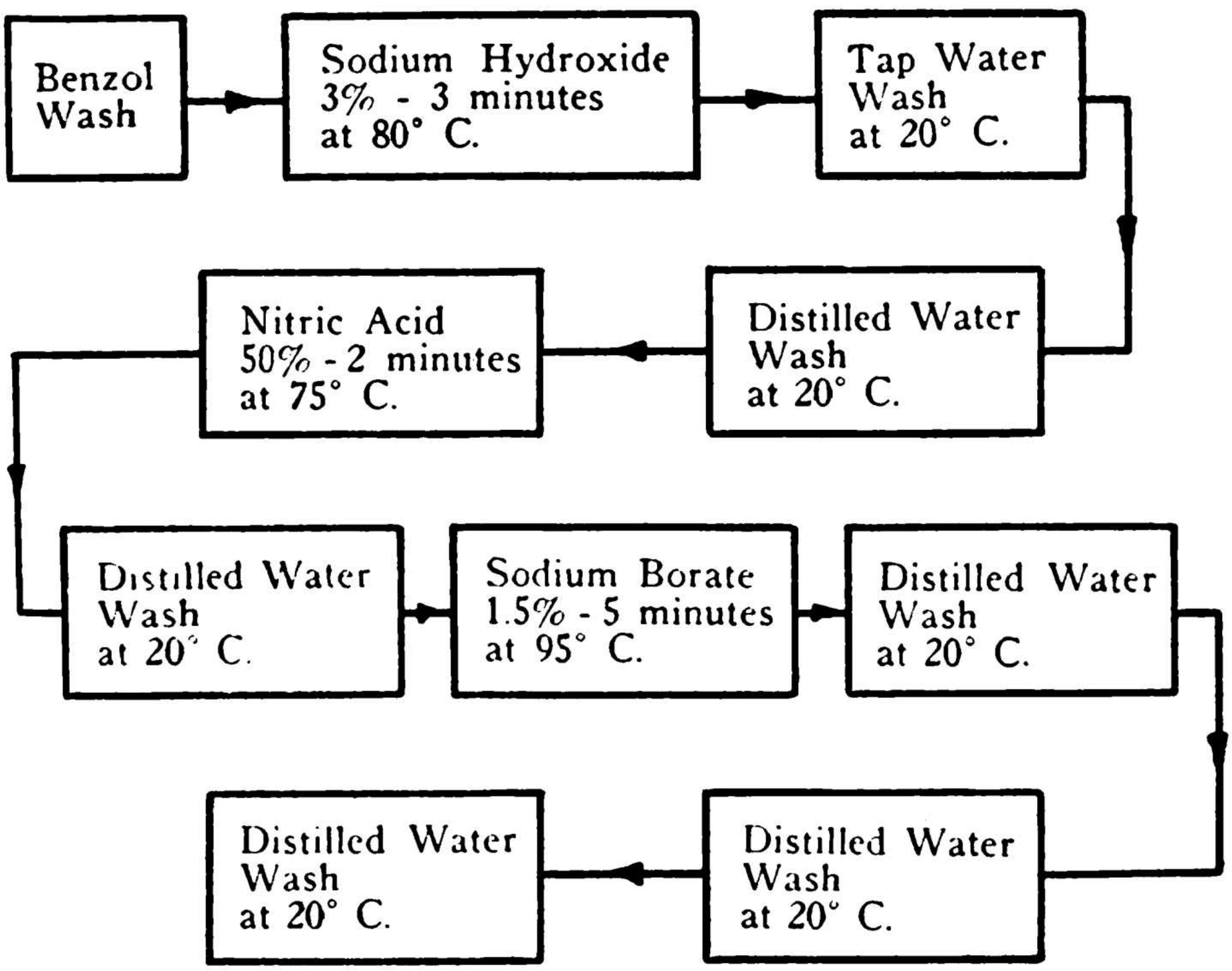

In the cases where the use of sodium hydroxide is mentioned, it is interesting to note that considerable latitude is encountered in the selection of desirable concentrations, temperatures and times of immersion. In practice, concentrations vary from 1% for 5 minutes at 95° C.; 3%, for 3 minutes at 80° C.; to 10%, for 2 minutes at 40° C.

Digitized by Google Original from UNIVERSITY OF MICHIGAN

Sodium Carbonate Method

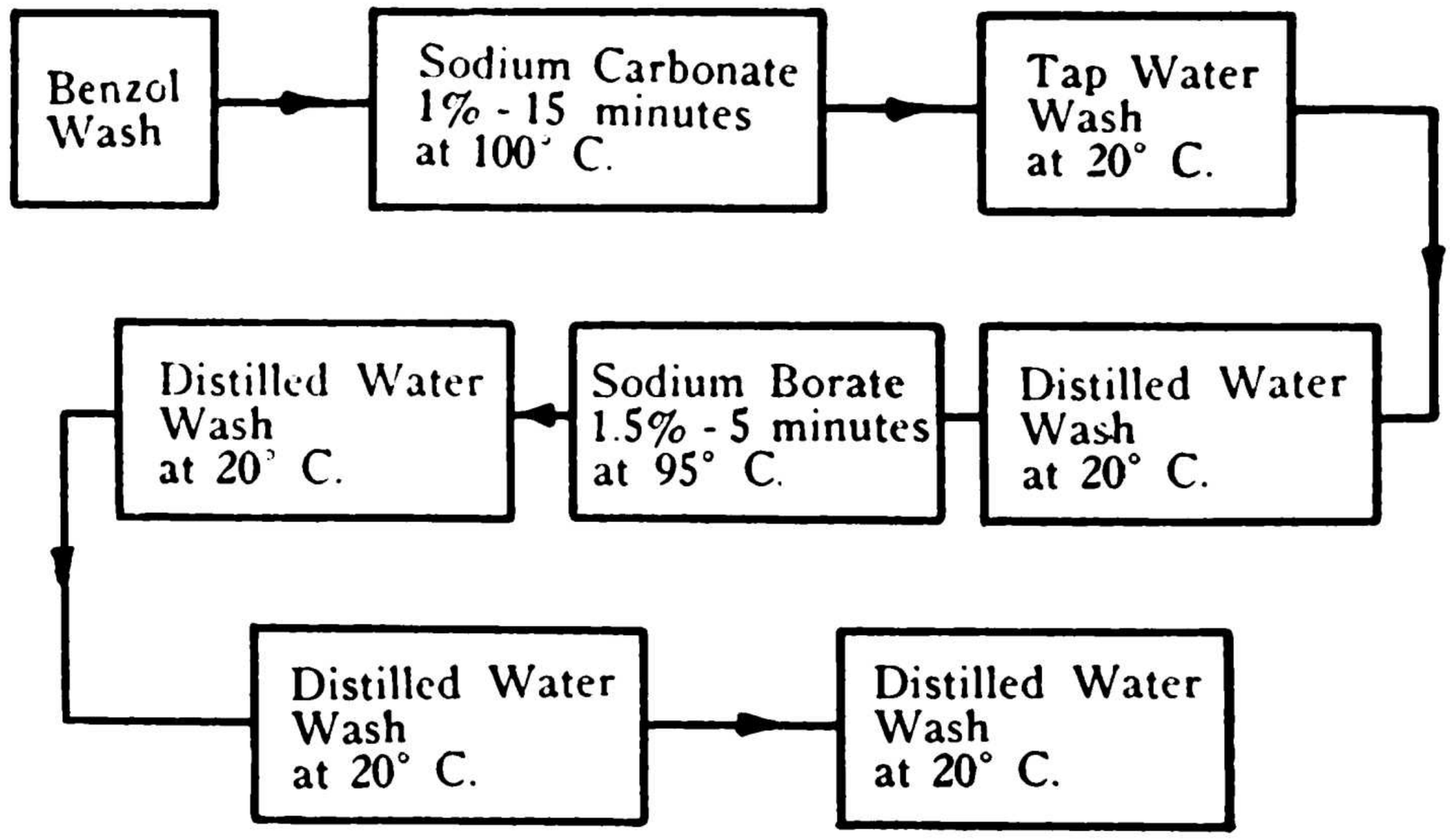

Potassium Dichromate-Sulphuric Acid Method

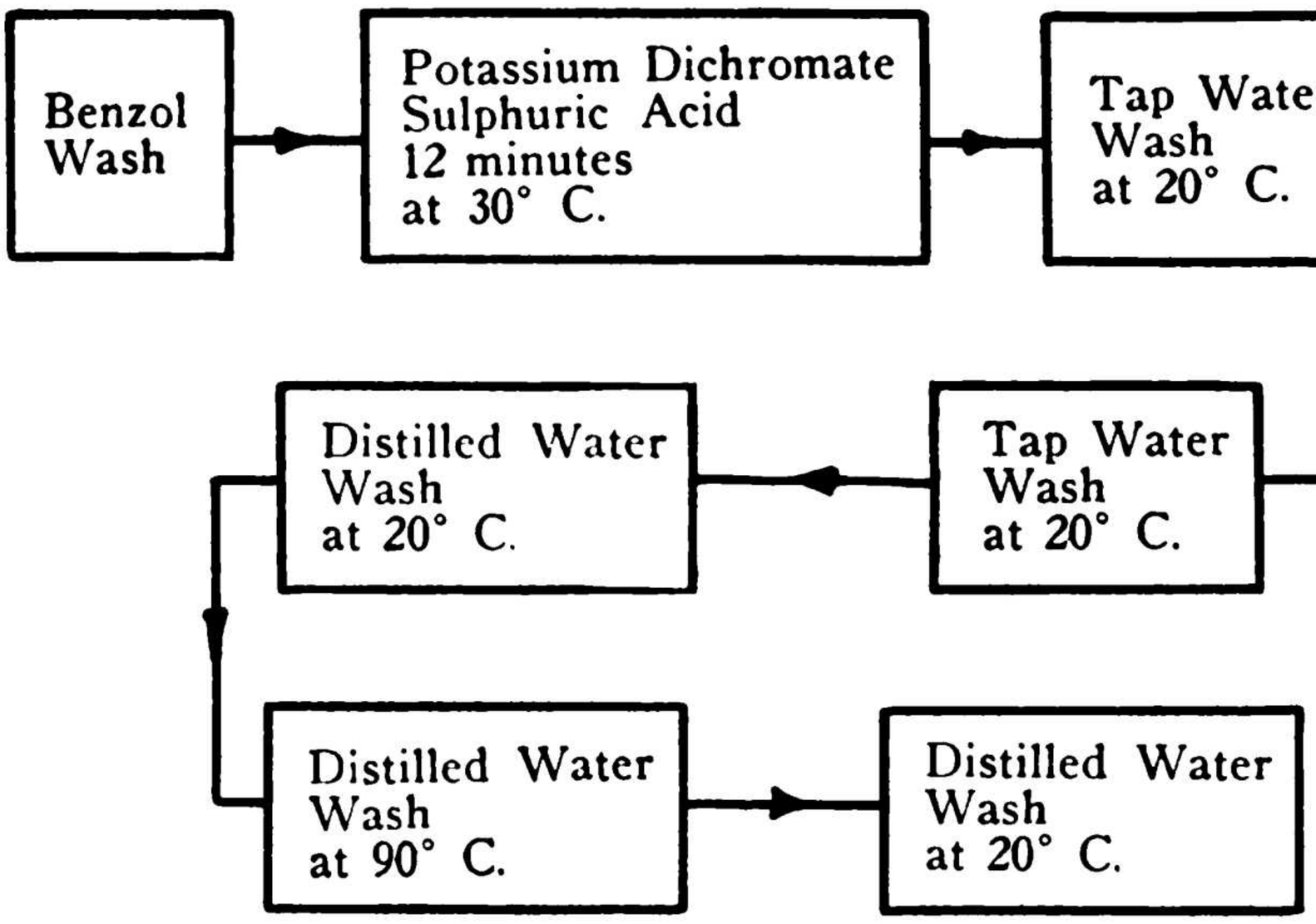

The potassium dichromate-sulphuric acid generally consists of 30 grams of finely ground potassium

Digitized by Google Original from UNIVERSITY OF MICHIGAN

dichromate, dissolved in each liter of concentrated 66° Baumé sulphuric acid.

After the final cleaning or washing operation by any of the mentioned methods, anode assemblies or foils are ready for the operation of being anodically filmed or formed with the dielectric coating. Such filming or forming operations take place immediately following the final cleaning or washing operations.

From a study of the foregoing procedures it becomes immediately apparent that anode assemblies, prior to anodic film forming operations, must be very thoroughly cleaned. It should also become equally apparent that once the cleaning operation has been completed, anode assemblies cannot be handled or even touched with the bare hand or other contaminating agents.

Anode assemblies using plain surface aluminum foil are always mechanically fabricated into finished form with riser rods or stems riveted or eyeleted in place. The entire assembly is then cleaned as an integral unit. Riser rods and rivets are as a rule given no preliminary cleaning other than a wash in solvents such as benzol, alcohol or trichlorethylene.

Anode assemblies, on the other hand, which incorporate the use of etched aluminum foil, must be etched prior to the attachment of the riser rods because riser rods and fastening rivets or eyelets are not etched for apparent reasons. This necessitates a different washing and cleaning technique for etched foil anode structures prior to the forming of the anodic dielectric film.

Digitized by Google Original from UNIVERSITY OF MICHIGAN

Cleaning of Etched Surface Aluminum Foil

In the chemical etching procedures previously outlined, it can be seen that after etching the surface of the anode foil it is necessary to remove all traces of remaining chlorides and heavy metals.

Chlorides are removed by washing in tap and distilled water washes and heavy metals exposed by the etching process or plated on the aluminum surface are removed by immersion in nitric acid. The use of the nitric acid obviously also necessitates the use of repeated washes to remove all traces of nitrates.

It is found to be very desirable to remove all traces of these contaminating substances before the etched foil is attached to the riser rods. This is nearly always the procedure.

In riveting, eyeleting or otherwise attaching anode foils to riser rods, the etched and washed foil must be handled so it becomes necessary to again wash the completed anode assembly thoroughly before formation.

A number of typically basic cleaning procedures for etched anode foil assemblies are outlined in the following block diagrams:

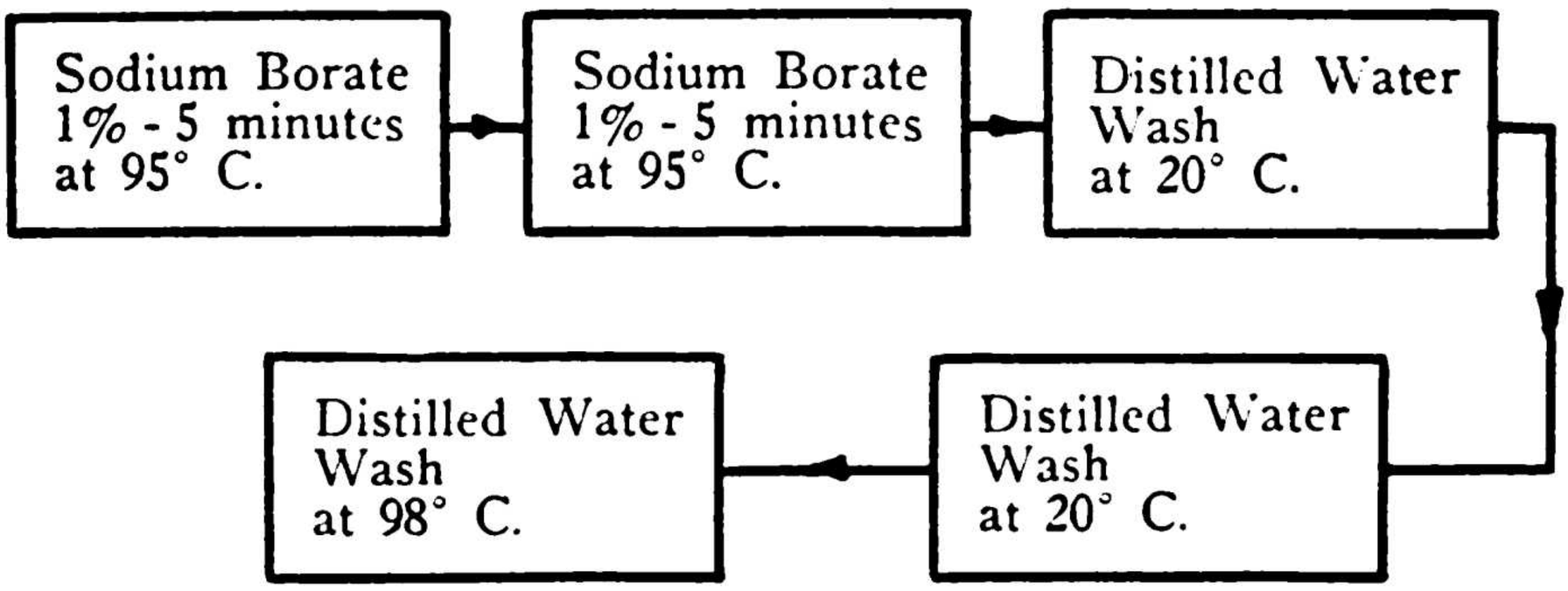

Digitized by Google Original from UNIVERSITY OF MICHIGAN

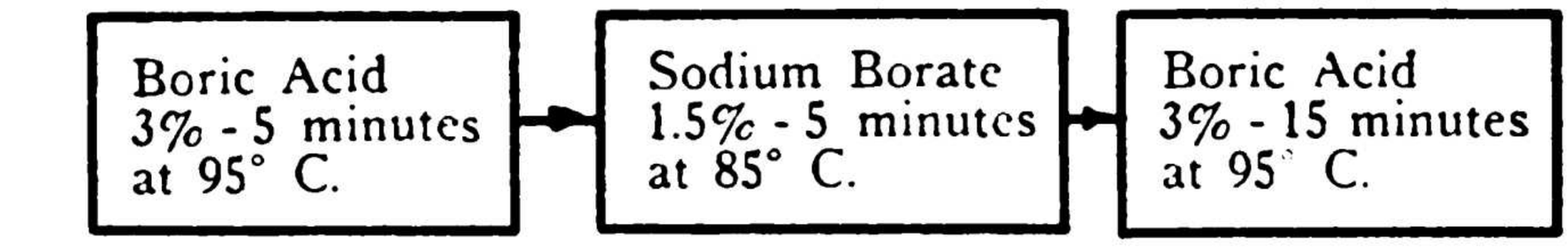

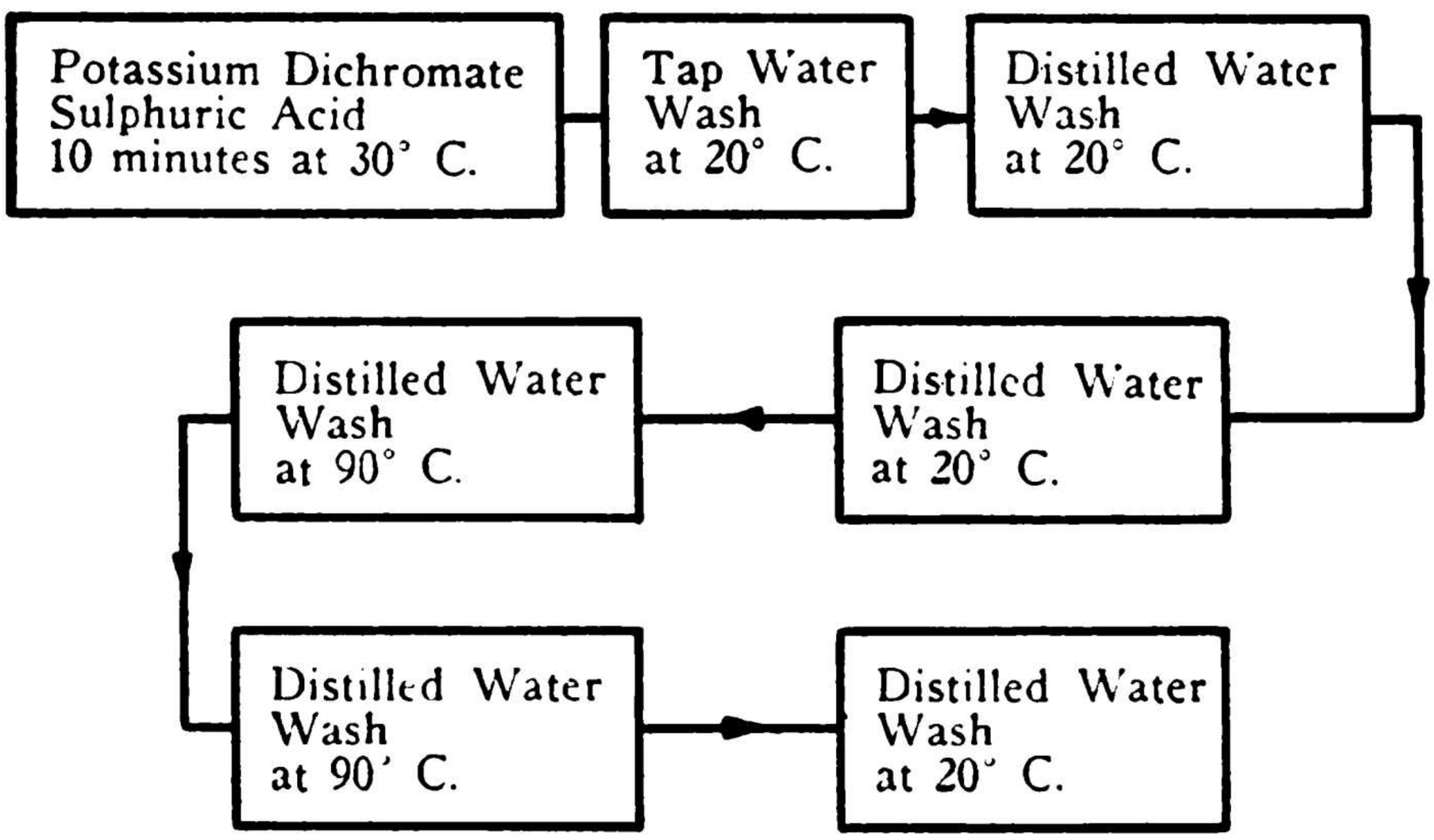

In the cleaning of all types of anode assemblies it has been observed, from experience, that washing of aluminum surfaces in hot water is to be avoided as much as possible for the following reasons. Aluminum when immersed in water that is neutral to pH7 or slightly alkaline hydrolyzes to form and take on a coating of aluminum hydroxide and hydrogen is evolved. Such coatings of aluminum hydroxide are very nearly impossible to remove and subsequently retard anodic film formations as well as affect very materially the contact resistance between the oxide film and electrolyte, in completed capacitors. This high resistance layer of aluminum hydroxide manifests itself in the form of increased equivalent series resistance of a capacitor and

Digitized by Google Original from UNIVERSITY OF MICHIGAN

a heavy layer of aluminum hydroxide may in some cases entirely prevent a satisfactory anodic film formation.

Acidifying wash waters slightly with boric acid tends towards reduction of the amount of aluminum hydroxide as does the use of strong nitric acid and potassium dichromate-sulphuric acid solutions. It has been further observed that exposure of freshly cleaned aluminum surfaces to warm or heated moist air also tends towards the formation of the unwanted aluminum hydroxide layers.

Chemically etched surfaces are obviously more susceptible to this condition than plain surfaces and great difficulties are frequently encountered in the processing of etched foil capacitors.

A number of methods for drying etched foil quickly and without the application of heat, in order that aluminum hydroxide formation may be reduced, include centrifugal drying and drying with higher alcohols of the hydroscopic class.

Anodic Film Formations and Formation Electrolytes

The formation of the anodic film can take place in either an acidic or basic electrolyte. The presence of acid ions in the electrolyte favors the formation of the anodic film whereas, in some cases, the presence of alkali ions favors the actual removal of the oxide film.

Experience has shown that there are two distinct types of films: a thin film of aluminum oxide (Al_2O_3) and a comparatively thick film of hydrated aluminum

Digitized by Google Original from UNIVERSITY OF MICHIGAN

oxide or aluminum hydroxide which also may contain other elements such as aluminum sulphate, oxalate, chromate or other acid reaction products.

The type of electrolyte used will determine, to a great extent, the type of film produced but there are other factors such as temperature and magnitude of applied electrical potential.

Experimental determinations have demonstrated the fact that anodic films can be formed in the following list of electrolytes:

Sulphuric acid	Molybdic acid
Oxalic acid	Citric acid
Phosphoric acid	Malic acid
Chromic acid	Boric acid
Acetic acid	Lactic acid
Sodium sulphate	Sodium malate
Sodium borate	Potassium cyanide
Sodium silicate	Potassium permanganate
Ammonium chromate	Ammonium borate
Ammonium phosphate	Ammonium acetate
Ammonium citrate	Ammonium molybdate
Ammonium bicarbonate	Ammonium lactate

This is, by no means, a complete list of the possible electrolytes which have shown results but it will readily serve to show the trend.

Theoretically, the ideal electrolyte would be distilled water in order that only oxygen would be evolved at the anode surface. Obviously this would be impossible and the water must be rendered more conductive by the addition of other substances, in order that current of sufficient magnitude for the desired electrolysis can be conducted.

Digitized by Google Original from UNIVERSITY OF MICHIGAN

If aluminum is immersed in an aqueous solution of sulphuric, phosphoric or oxalic acid and made the anode, it will be found, upon passage of current, that the aluminum surface will acquire a tough film of a rather gelatinous nature. It will also be found that the same magnitude of current will pass with time. In other words, the film does not show a current limiting action as it is built up. This demonstrates that the film will continue to be increased in thickness as long as voltage is applied. It has been noted that the thickness of such a film is determined by the time of current application and the acid concentration. The acid concentration obviously determines the current density or magnitude at any given polarization potential. The operative polarization potential in this type of film formation is definitely limited to a narrow range and is different for each of the three acids mentioned. Illustrative of these anodic film formation methods are the following actual procedures:

Sulphuric acid concentration 10% by weight

Time of immersion 5 to 15 minutes

Current concentration 0.1 amperes per square inch of anode foil

Temperature 20 to 25° C.

Voltage 15 to 20 volts.

Oxalic acid concentration 10% by weight

Time of immersion 10 to 15 minutes

Current concentration 0.3 amperes per square inch of anode foil

Temperature 25 to 30° C.

Voltage 25 to 30 volts.

Digitized by Google Original from UNIVERSITY OF MICHIGAN

This type of film does not possess the asymmetric characteristics of the aluminum oxide film and is therefore known as an inactive film to distinguish it from the extremely thin dielectric film of aluminum oxide known as the active type of film. The inactive type of film is apparently a form of hydrated aluminum oxide which contains some aluminum salts of the acid used in the electrolyte. Although not a satisfactory dielectric, the inactive film may be rendered conductive in the presence of alkali ions, which fact may permit the subsequent formation of an active oxide film on the aluminum surface, beneath the inactive film. The presence of an inactive film, however, reduces the effective capacity and increases the equivalent series resistance of a completed capacitor of either the wet or dry electrolytic type. On the other hand, the inactive film is sometimes used as a mechanical protective coating for the active oxide film. This will be referred to again in later chapters.

The true active dielectric film of aluminum oxide is best formed in an aqueous solution of ammonium or sodium borate and the concentrations of the borate salt are desirably such that the electrolyte is sufficiently conductive but definitely on the acid side of neutrality. To accomplish this, boric acid is added to the electrolyte. As the phenomenon of sparking or voltage breakdown of the active anodic film is a function of the log of the ion concentration and temperature of the electrolyte, the net result is that for satisfactory anodic film formations the electrolyte consists, in practice, of an aqueous solution of boric acid with a comparatively small content of either ammonium or sodium borate.

Digitized by Google Original from UNIVERSITY OF MICHIGAN

In practice the boric acid content ranges from ten to sixteen per cent, by weight, of the total electrolyte solution.

Experience has shown that sodium borate has a number of practical advantages not possessed by ammonium borate and for that reason it is in general use.

The amount of sodium borate that is permissible in an electrolyte is governed by the voltage of film formation. The higher the voltage of film formation, the lower the permissible quantity of sodium borate. In fact, for formations above certain voltage ranges, the sodium borate content is reduced to zero.

Illustrative of the variation of permissible sodium borate content is the following tabulated data:

Water	*Boric Acid*	*Sodium Borate*	*Forming Voltage*
100 c.c.	15 grams	None	650 to 700 volts
100 c.c.	15 grams	0.12 grams	550 to 600 volts
100 c.c.	15 grams	0.25 grams	500 to 525 volts

For lower formation voltages it becomes obvious that the sodium borate content may be increased in proportion to the reduction in forming potential but experience has shown that a thinner and more active film is produced with the lowest concentrations of sodium borate. For that reason the higher voltage electrolytes are as a general rule employed for forming oxide films at practically all voltages.

It appears that the use of sodium borate contents above certain concentrations tends to result in the active film being covered with a layer of aluminum hydrate. Whether this is the case or it is that the active

Digitized by Google Original from UNIVERSITY OF MICHIGAN

film is actually hydrated to some extent is not definitely known. Either one or the other of the two possible conditions results in an increase in contact resistance between the active film and the electrolyte, in finished capacitor structures.

In practice anode assemblies are either formed by one or the other of two processes called still and continuous formations.

In the still formation process, anode assemblies are immersed in electrolyte contained in copper lined wooden tanks. Voltage is applied between the copper lining and the anode. A low voltage is first applied and gradually and continuously increased in value while the value of current is maintained at some predetermined, constant value until the desired value of voltage is reached. When the desired value of voltage has been reached it is held constant until the current decreases to a predetermined minimum value. The formation at this point is complete and the anode assemblies are removed, then assembled into capacitors.

In the continuous formation process, anode assemblies are carried by a mechanical conveying system in such a manner as to pass, at a uniform rate, through the electrolyte. In this process full desired formation voltage is applied at all times and the current allowed to decrease as the anode is moved through the electrolyte. The speed of travel is so adjusted that by the time the anode has traveled a predetermined distance, the current will have decreased to the value required for a complete film formation.

Although many advantages are claimed for one process versus the other, both processes produce equal-

Digitized by Google Original from UNIVERSITY OF MICHIGAN

ly satisfactory results although the still process of formation is in more general use than the continuous.

As a general rule, electrolytes are maintained at or near their boiling points during the formation of anode assemblies and the chemicals used to make up the electrolytes are of the highest purity obtainable. In this respect it is highly essential that electrolytes be kept free of impurities, such as chlorides, nitrates, sulphates, and iron, to the extent of less than one part in a million.

The following graphical illustration shows the relationship between current, voltage and time during a typical still formation cycle of wet electrolytic anode assemblies.

From experience it has been found that satisfactory film formations require initial current densities of

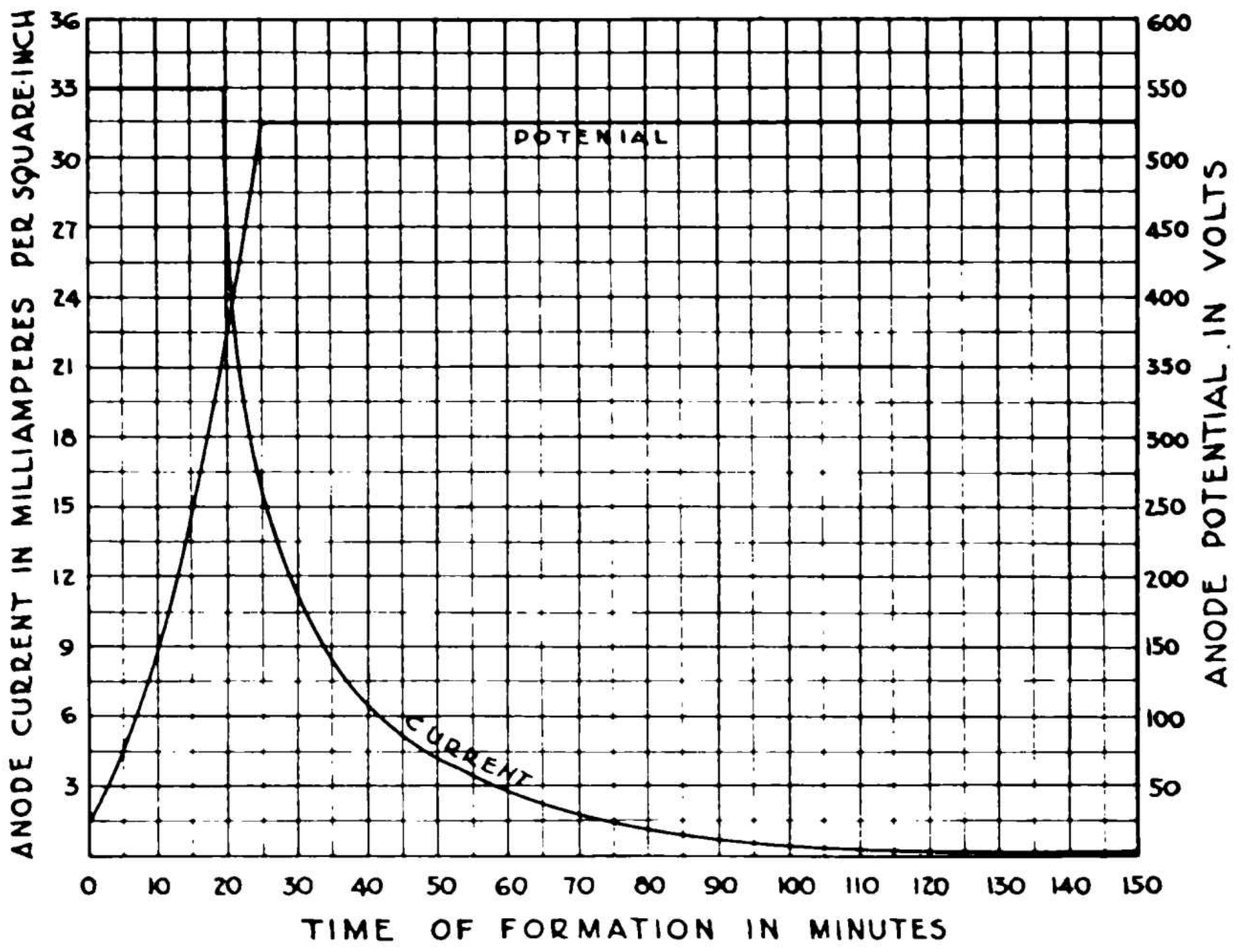

Digitized by Google Original from UNIVERSITY OF MICHIGAN

from 15 to 20 milliamperes per square inch of anode surface, for plain surfaces, and from 30 to 50 milliamperes per square inch of anode surface for etched surfaces. Anode assemblies which have acquired the desired oxide film show, as a general rule, a terminal or finished, steady state current density varying from 50 microamperes per square inch of plain anode surface to 100 microamperes per square inch of etched surface.

A number of variable factors are encountered in the formation of anodic films. It is found that the rapidity of formation varies to a considerable degree with the purity of the aluminum used in the anode assemblies. The higher the purity the more rapid is the film formation. This naturally follows because any presence of heavy metals such as iron or copper would prevent film formation at the points where they occurred as these heavy metals have no film forming characteristics. Even when present in the most minute degree the least effect that can be anticipated is an increase in the steady state current density or what is termed leakage current.

The presence of chloride contamination in the electrolyte or on the surface of the anode, even though the quantity be only a few parts in a million, will effectively decrease the rapidity of film formation or prevent formation at all due to the highly corrosive action of the chlorine ion on aluminum. So important is the question of chloride contamination that it is customary to check formation electrolytes almost hourly for the presence of chlorides. Other types of contamination are almost equally detrimental but the chlorine ion is the worst of all.

Digitized by Google Original from UNIVERSITY OF MICHIGAN

Improperly cleaned and aluminum hydrate coated anode surfaces very materially "slow up" the process of film formation.

One particular phenomenon has been noted in relation to the effect, on film formation, of the presence of aluminum hydrate or aluminum hydroxide coatings on the anode surface. Such coatings or layers are comparatively porous and therefore tend to entrap minute bubbles of oxygen during the formation process. These bubbles of oxygen tend to block current flow and the effect is a decrease in forming current seeming to indicate proper progress in the formation of the anodic oxide film. In many cases, forming current decreases at such a rate that an anode is considered to be completely formed when such is not the case but the current has been completely blocked by the occluded bubbles of oxygen. Such a condition can be checked by removing the applied potential for sufficient time to allow the oxygen to escape and be replaced by electrolyte and upon again applying voltage the current density increases to values normal to the actual condition of the oxide film.

At times, the elimination of aluminum hydrate films is so difficult that special formation procedures are necessary to offset the lowering of formation efficiency. Such a procedure sometimes consists of applying formation voltages in steps of, for example, 50 volt increases with one minute idling or zero potential periods in between until the final desired value of voltage is reached. Even after full voltage values are reached the circuit is opened at fixed intervals, during the forming cycle, for one to five minute idling periods. The

Digitized by Google Original from UNIVERSITY OF MICHIGAN

sudden application of potential after an idle period of this nature is sometimes called "surging." Chemically etched anode assemblies are extremely affected by this detrimental coating of aluminum hydrate because of the nature of the etched surface initially.

After an anode is completely formed it is removed from the formation electrolyte, rinsed in cold distilled water or cold distilled water with a boric acid content of not more than three per cent. It is now ready to be assembled into the container and the capacitor completed but as a test on the effectiveness of the anodic film it is customary to wait from twelve to twenty-four hours and then test the anode for leakage current. Such a test is made by immersing the anode in cold electro-

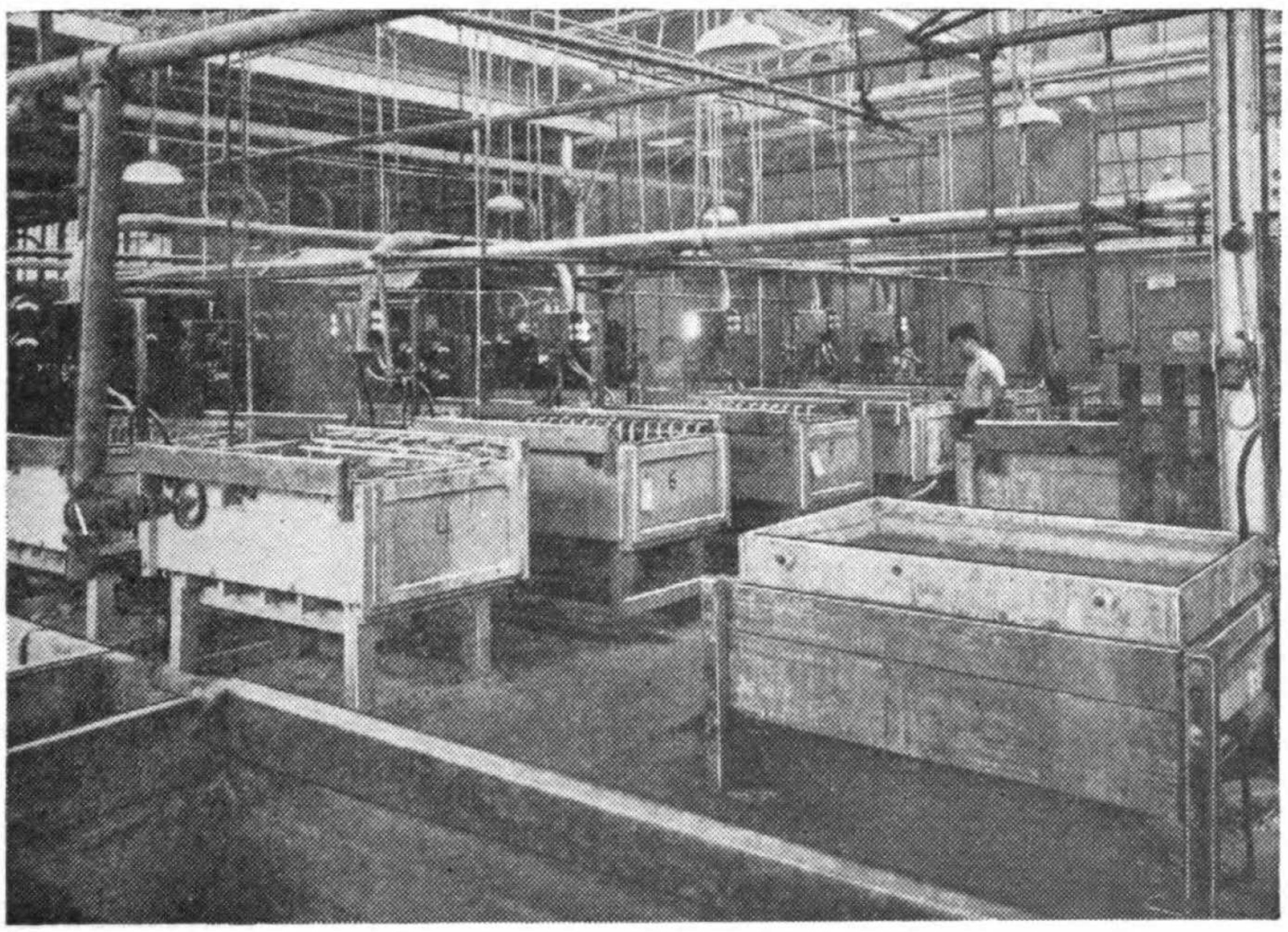

(Courtesy Cornell-Dubilier Electric Corp.)

Anodic film formation of anode assemblies for wet electrolytic capacitors.

Digitized by Google Original from UNIVERSITY OF MICHIGAN

lyte of the same chemical composition as the electrolyte intended for use in the completed capacitor, applying voltage and reading the current which the oxide film passes at the end of one minute.

Relationship Between Anode Surface Area and Capacity

As has been previously mentioned, the electrical capacity of an electrolytic capacitor is a direct function of the anode surface area and an inverse function of the thickness of the dielectric film of aluminum oxide. The thickness of the dielectric film is an almost uniform function of the voltage or potential of film formation. To illustrate the relation between electrical capacity and anode surface area, reference is made to the ac-

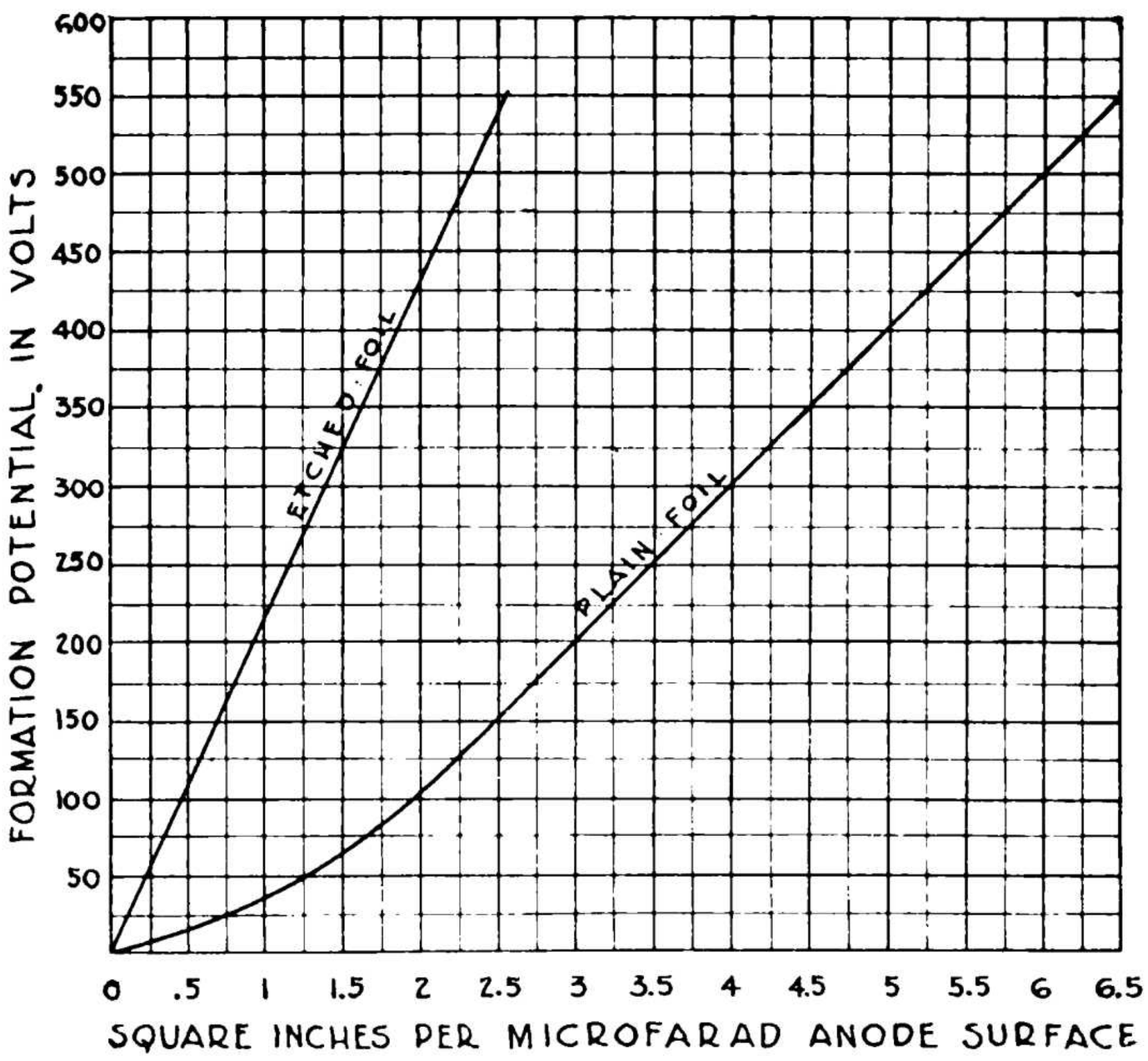

Digitized by Google Original from UNIVERSITY OF MICHIGAN

companying graph which also takes in the varying thickness of the film with formation voltage.

The graph on page 64 indicates surface areas of the anode surface but by this it is meant one side of the anode foil or plate and not the actual total surface area, which would obviously include both sides. All previous and future references of such a nature will be made on the same basis.

Fill Electrolytes and Their Characteristics

After anode assemblies have been formed they are assembled into their containers and the containers filled with the operating electrolyte. This electrolyte will be frequently referred to as the fill electrolyte to distinguish it from the formation electrolytes.

Fill electrolytes are aqueous solutions of boric acid and sodium or ammonium borate. The use of ammonium borate is general today where aluminum containers are almost exclusively used for wet electrolytic capacitors. Some nine or ten years ago copper containers were in general use and at that time sodium borate was used, the ammonium borate being obviously not suited for use in such containers.

Wet electrolytic capacitors are primarily designed to operate at normal room temperatures; thus a determining factor for the quantity of boric acid, which can be used in the electrolyte, is automatically established. The maximum quantity of boric acid which can be used is limited to that amount which will remain in solution at room temperature, in other words 20° centigrade,

Digitized by Google Original from UNIVERSITY OF MICHIGAN

which temperature is nominal low value. Experimental determination shows this quantity to be a maximum of 5 grams per 100 c.c. of water.

The quantity of ammonium borate in the fill electrolyte or rather the quantity of ammonia, is governed by two factors; namely, the minimum rated sparking or scintillating voltage in one case and the necessity of keeping the electrolyte definitely on the acid side of neutrality in the other case. With these limitations, fill electrolytes are confined to a fixed range of chemical composition.

While theoretically it would appear that the phenomenon of dielectric film breakdown would occur over a wide range of applied potentials, such is not actually the case and audible scintillation or visible sparking rarely occurs below a potential of 350 volts even though the ion concentration of the electrolyte be relatively high.

As ion concentration is the determining factor of electrolyte conductivity it is customary to determine ion concentrations by simple resistivity measurements.

The following graph shows the relation between electrolyte resistivity and variable ammonia content. As temperature is also a determining factor of resistivity, the same graph also shows the effect of temperature variation. The graph is based on a fixed boric acid content of 5 grams and a water content of 100 c. c. for reasons already mentioned.

A study of this data reveals two important facts. One is the variation of specific resistivity with ammonia content and the other is the fact that the lower the ammonia content, the greater the change in specific

Digitized by Google Original from UNIVERSITY OF MICHIGAN

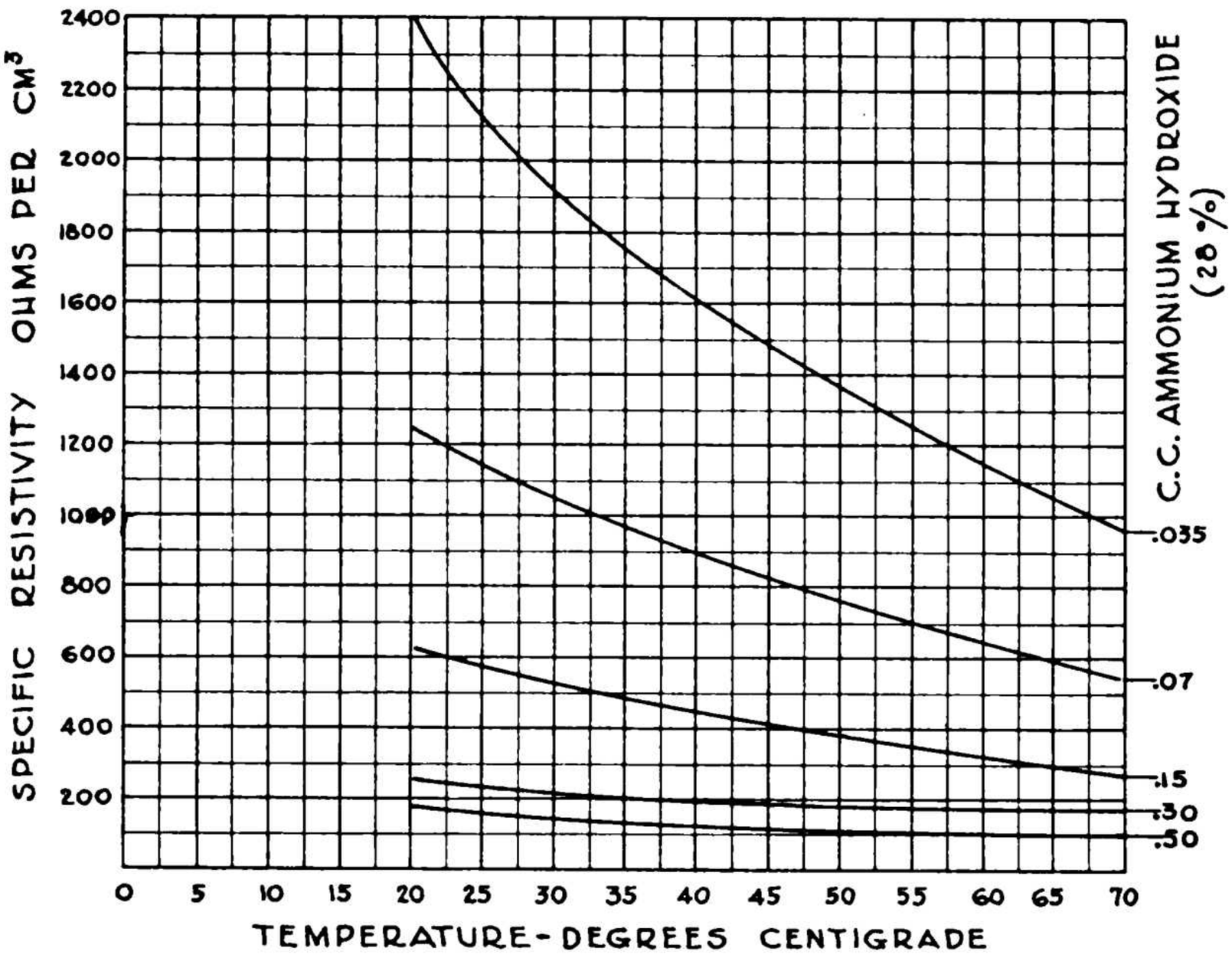

resistivity with a given change in temperature. It can furthermore be seen that the higher the operating voltage of a wet electrolytic capacitor the higher its equivalent series resistance and the greater its change in equivalent series resistance with change in temperature.

As the scintillating voltage is a log function of the specific resistivity of the electrolyte, temperature and dielectric film thickness it must hold true that scintillating or breakdown voltage varies with the ammonia content. To illustrate the relation between these values reference is made to the following graphical illustration.

The values of scintillating voltage shown are based on measurements made at 20° C. with a dielectric film formed initially to 525 volts.

The wet electrolytic capacitor utilizing an aqueous electrolyte is obviously not adapted for operation in

Digitized by Google Original from UNIVERSITY OF MICHIGAN

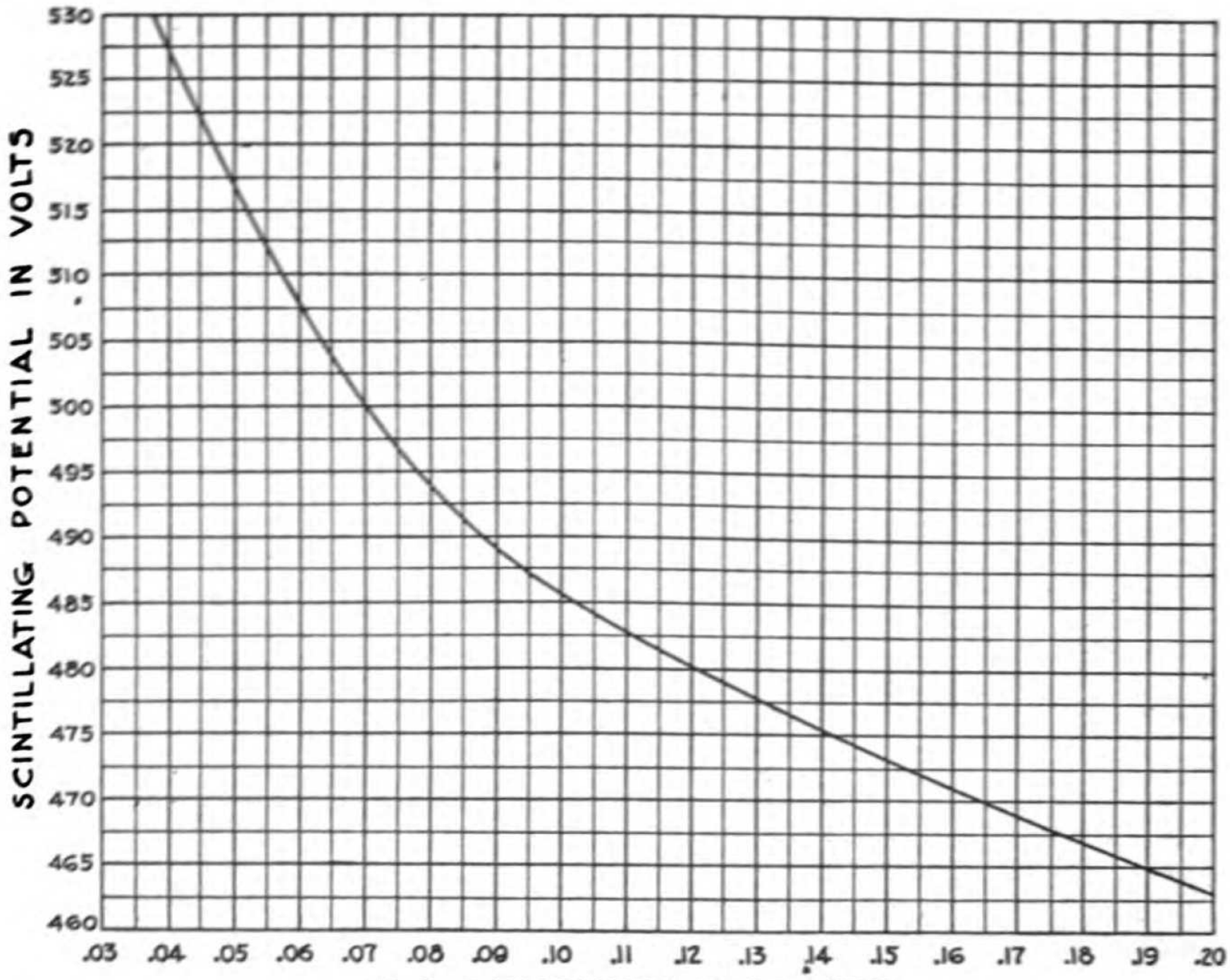

ambient temperatures near the freezing point of water because near that temperature the electrolyte will also freeze. To overcome this limitation electrolytes, incorporating the addition of a polyhydric alcohol such as glycerol or ethylene glycol, have frequently been employed. With the use of such an electrolyte, the operating temperature range has been extended to values as low as minus 30 degrees centigrade with satisfactory results. Such an electrolyte, with a scintillating voltage (at 20° C.) of 500 volts, is shown below:

Ethylene Glycol	32.7%
Ammonium Hydroxide	0.1%
Boric Acid	7.5%
Water	59.7%

Digitized by Google Original from UNIVERSITY OF MICHIGAN

One serious disadvantage to the employment of such an electrolyte has been noted and that is, should the potential applied be of such magnitude to cause scintillation or sparking at the anode surface, the heat of the spark will cause decomposition of the polyhydric alcohol and small deposits of carbon will appear on the anode surface. Such deposits of carbon will increase the leakage current of the capacitor and may, if the deposits are large, render the capacitor unsatisfactory for further use.

It has been found that glycerol is much more susceptible to such decomposition than is ethylene glycol.

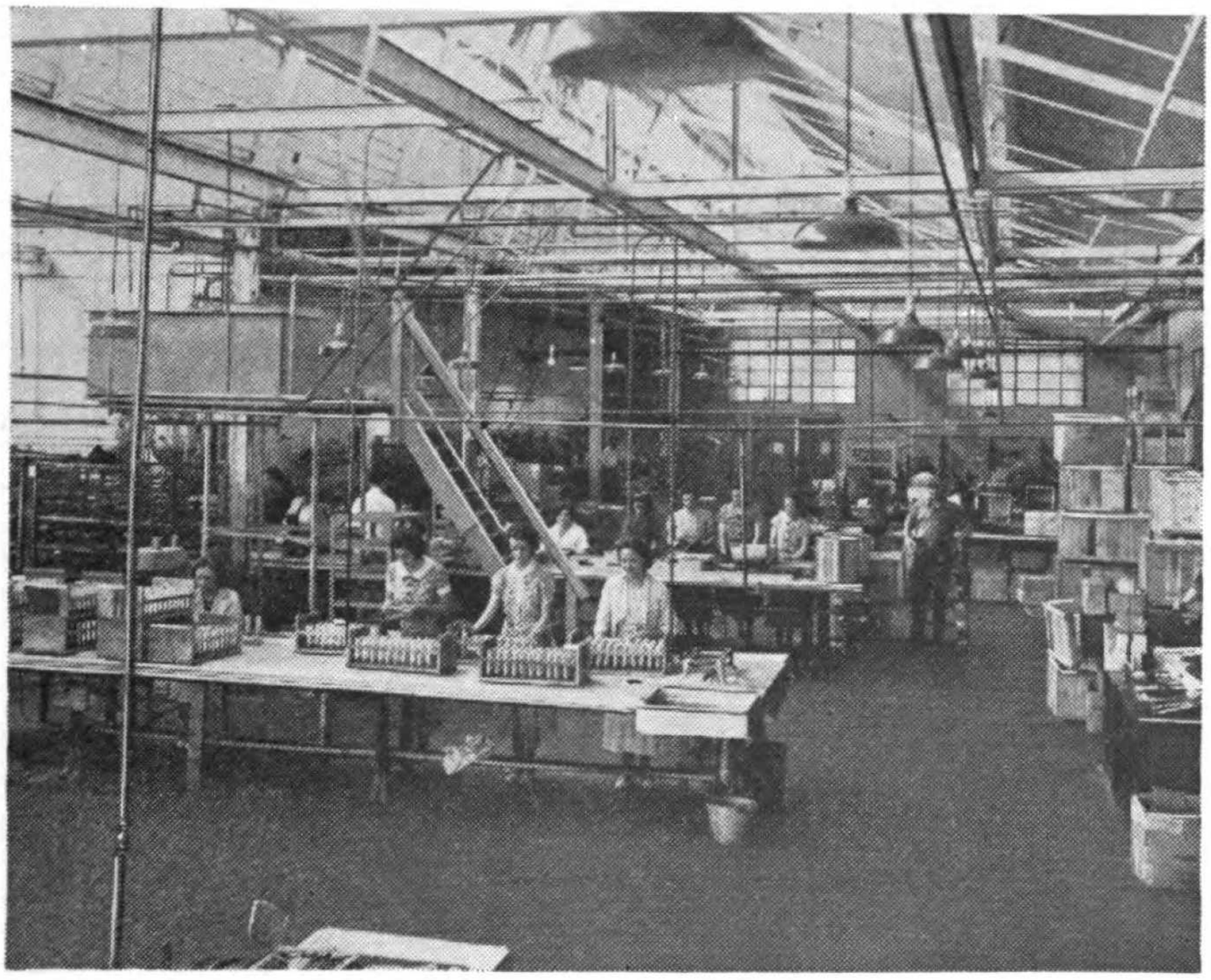

(Courtesy Cornell-Dubilier Electric Corp.)

Assembly of wet electrolytic capacitors.

Digitized by Google Original from UNIVERSITY OF MICHIGAN

Chapter VI

AGING AND CHARACTERISTICS OF WET ELECTROLYTIC CAPACITORS

Aging of Wet Electrolytic Capacitors

THE final mechanical operation in the fabrication of wet electrolytic capacitors is to fill the containers with electrolyte and seal them. After such operations it is generally necessary to "age" the capacitors. Aging consists of applying a potential to the capacitor, equal to or slightly in excess of the rated operating voltage of the capacitor for a predetermined period of time. The time of aging may vary considerably with different types of capacitors, depending upon the desired characteristics of final leakage current.

The aging of wet electrolytic capacitors is generally necessary because, although the anode assembly may leave the formation tank in perfect condition, it must be subjected to considerable handling in subsequent mechanical assembly operations. This handling invariably causes some breakage or cracking of the anodic film and the application of an aging or reforming potential is necessary to repair this damage. Breaks or cracks in the oxide film would, obviously, increase the leakage current values of the capacitor. In fact, an excessive amount of film breakage might increase the leakage current to such a value that it would be impossible to repair the damage due to the fact that the capacitor structure, as a whole, would be incapable of radiating the heat generated as the result of the passage

Digitized by Google Original from UNIVERSITY OF MICHIGAN

of sufficient current to repair or reform the film. If the heat could not be radiated then ultimately the temperature of the electrolyte would be increased to the boiling point and subsequently lost by evaporation.

To minimize such a condition aging potentials are applied through limiting resistors in order that the current passing through the capacitor will be limited to a maximum value consistent with the amount of heat a given capacitor structure is capable of radiating, without reaching a temperature in excess of a safe equilibrium value.

At the termination of the aging period, capacitors are complete except for the measurement of essential electrical characteristics.



(Courtesy Cornell-Dubilier Electric Corp.)

Aging of completed wet electrolytic capacitors.

Digitized by Google Original from UNIVERSITY OF MICHIGAN

Electrical Characteristics of Wet Electrolytic Capacitors

The essential electrical characteristics of a wet electrolytic capacitor are: capacity, leakage current, equivalent series resistance and scintillating voltage. Detailed data on the various methods of measuring or determining these various electrical characteristics will be found in the chapter devoted to electrical measurements.

Other characteristics of equal interest are the following:

1. Effect of temperature.
2. Effect of idle shelf periods.
3. Life.
4. Operating limitations.
5. Regulating characteristics.

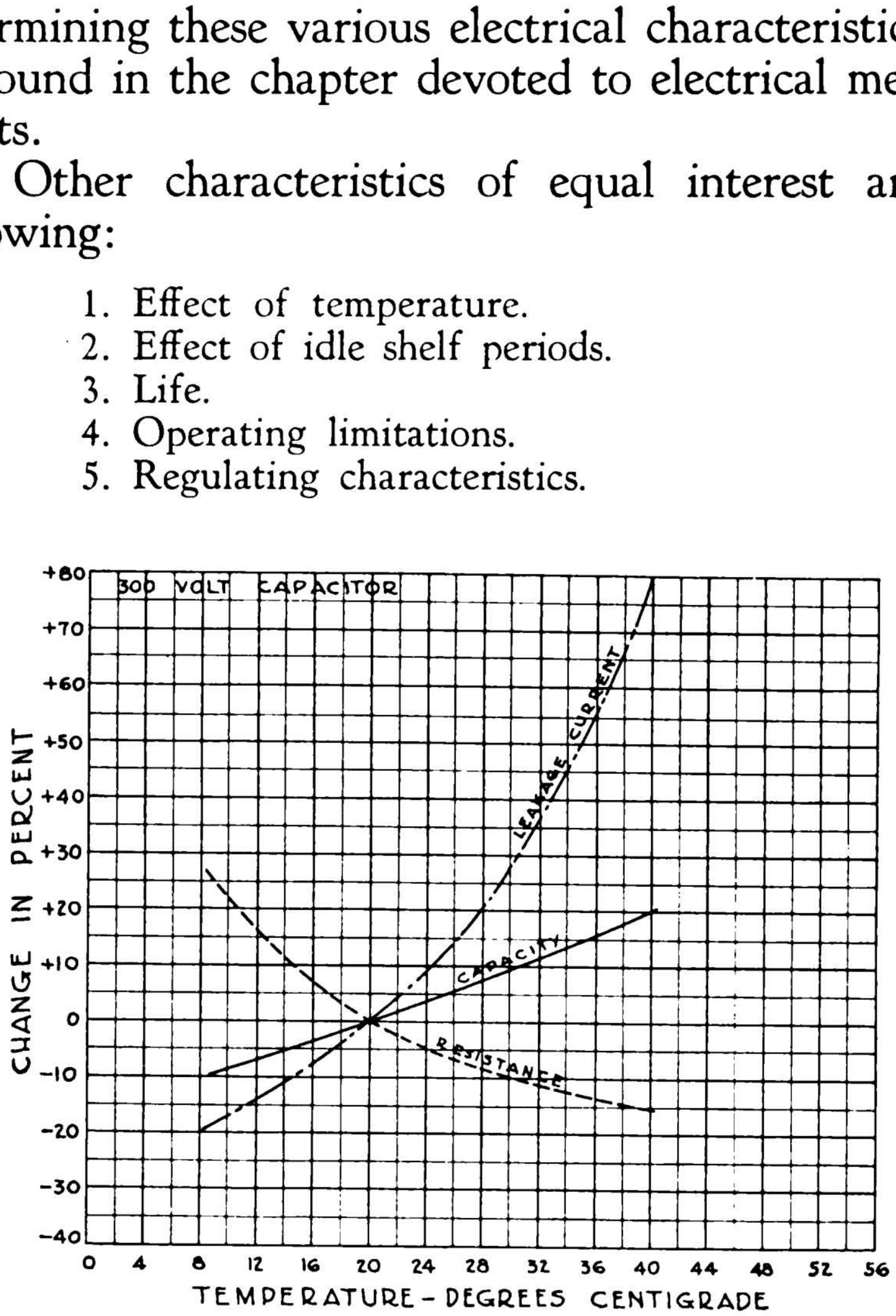

Digitized by Google Original from UNIVERSITY OF MICHIGAN

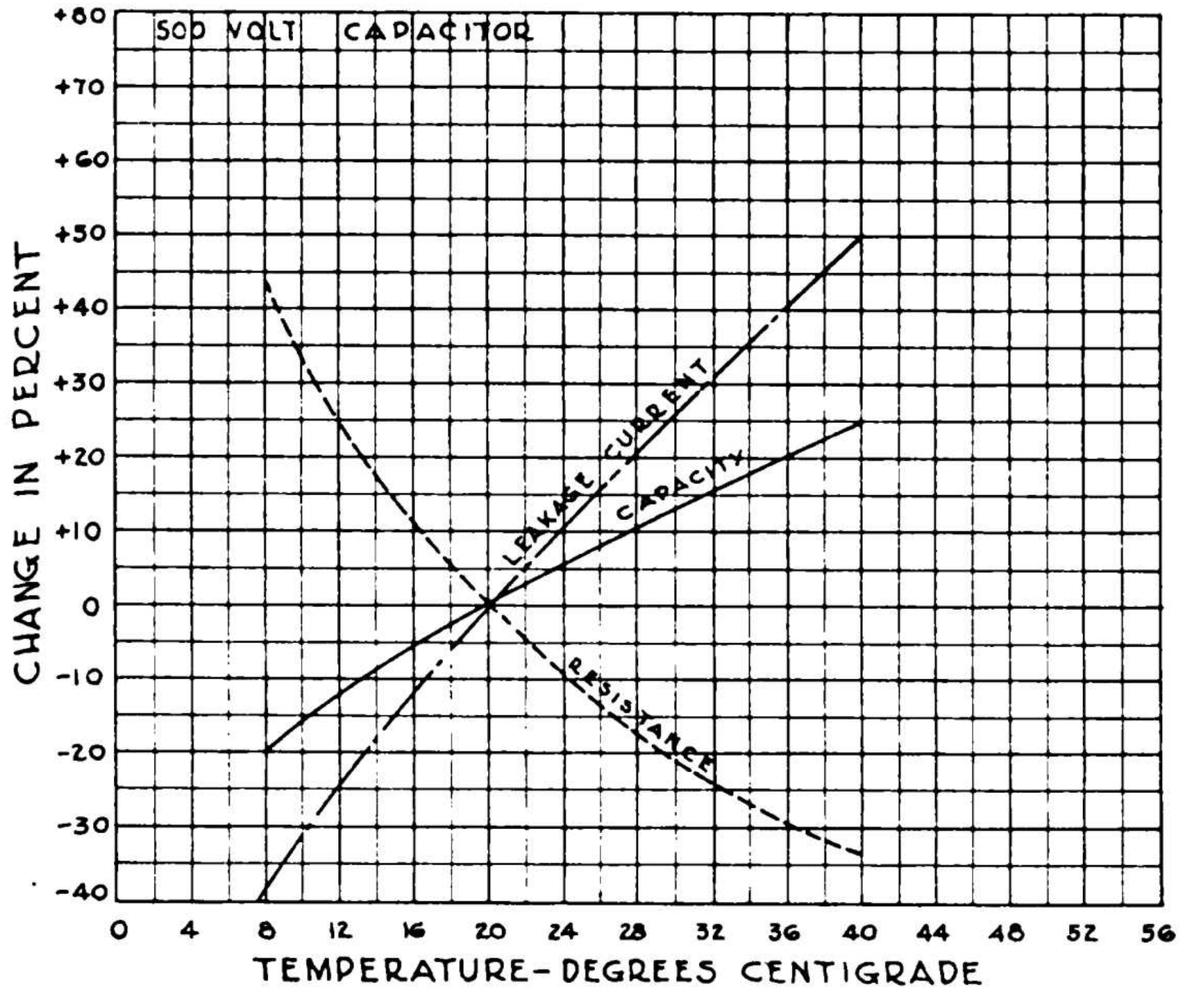

1. Effect of Temperature

The effect of temperature variation on capacity, leakage current and equivalent series resistance is shown in the preceding graphical illustrations.

In these two illustrations, the indicated effect of temperature variation is limited to the range of temperatures which normally may be expected to be encountered under operating conditions. Changes in capacity, leakage current and equivalent series resistance are indicated in per cent of increase or decrease of nominal values at a temperature of 20 degrees Centigrade.

The following illustration indicates, graphically, the reduced effect of temperature variation on the three essential characteristics of wet electrolytic capacitors when the non-freezing or polyhydric alcohol type of electrolyte is employed. It is immediately apparent,

Digitized by Google Original from UNIVERSITY OF MICHIGAN

from a study of this graph, that the useful range of the capacitor is materially extended over a wider range than that obtained with aqueous types of electrolytes. This refers especially to the lower temperature ranges.

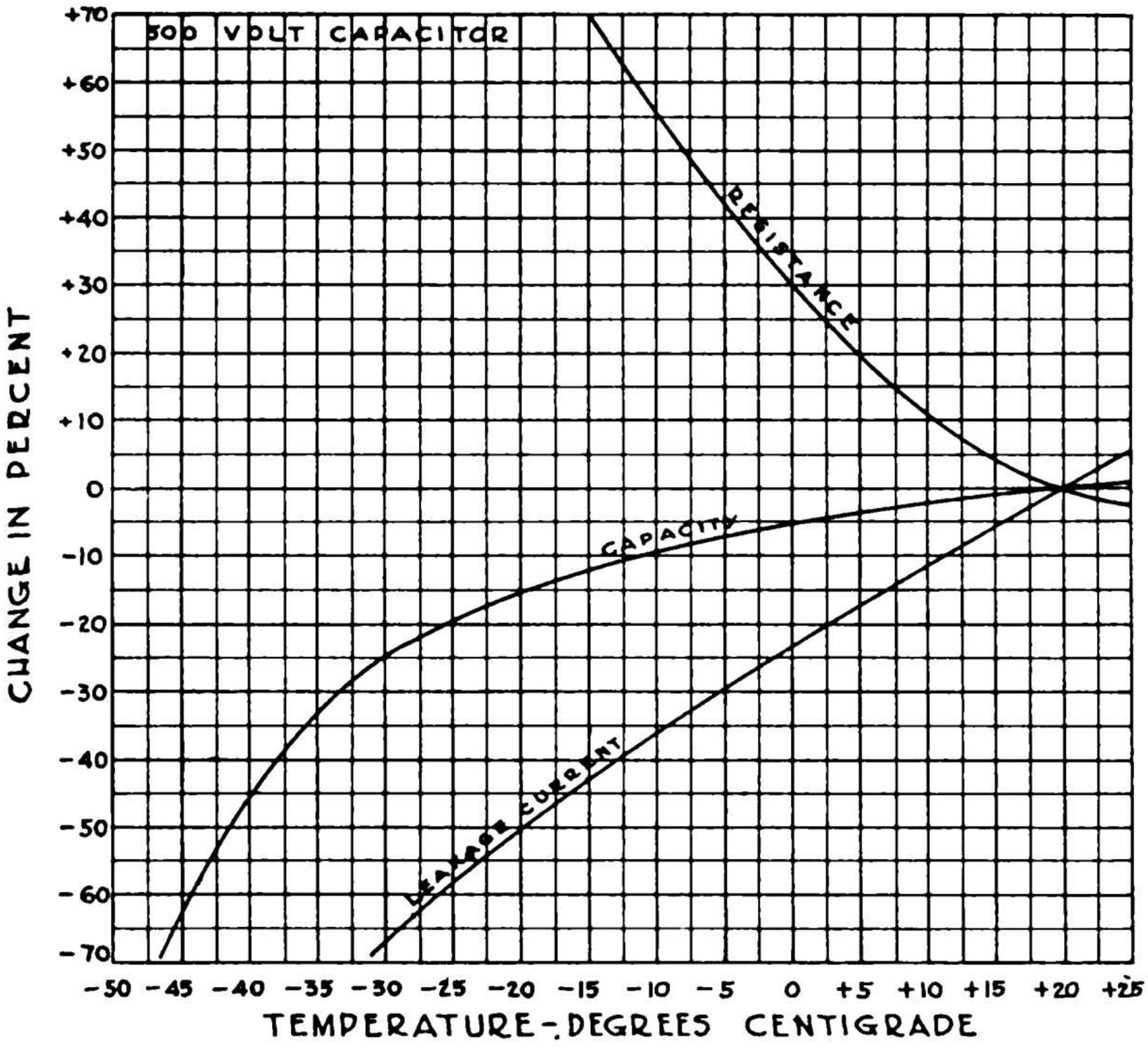

2. Effect of Idle Shelf Periods

It is a characteristic of wet electrolytic capacitors that the anodic film becomes weakened or less effective during sustained idling periods. It is not clearly understood just why this should be so but it is thought that possibly the electrolyte hydrates the outer boundaries of the oxide film to some degree and in that way temporarily reduces the effective thickness of the dielectric. An indication that this is true is the fact that anodic films, formed initially with an appreciable outer coat-

Digitized by Google Original from UNIVERSITY OF MICHIGAN

ing of aluminum hydrate, show very poor idle shelf or recovery leakage characteristics.

Other factors which have a detrimental effect on idle shelf characteristics are: purity of aluminum used in the entire anode structure, amount of impurities occluded in the anode material, separator, vent and stem bushing and the amount of impurities contained in the electrolyte.

Anode assembly surfaces may be initially clean and free from contaminating substances but if any such substances are occluded in the aluminum they may later work out to contaminate the electrolyte. This in particular applies to etched foil type anode structures. For the same reasons it is imperative that hard rubber separators, stem bushings, vents and other parts of the capacitor structure, coming in contact with the electrolyte, be not only cleaned on exposed surfaces but that no contaminating materials be occluded beneath the surfaces, to later work out into the electrolyte.

If the required degree of cleanliness and the required degree of chemical purity of the electrolyte are maintained, and the anode film has been properly formed initially, the capacitor will rapidly reform to a low value of leakage current in a relatively short period of time.

It has been also noted that the relative acidity or alkalinity of the fill electrolyte has a bearing on the rate of anodic film deterioration. An increase in the deterioration rate takes place with an increase in pH value of the electrolyte. The increase in rate of deterioration does not, however, present any serious difficulties unless a pH value of 7 or above is encountered. The fact

Digitized by Google Original from UNIVERSITY OF MICHIGAN

that the rate of deterioration does increase with increase in pH value of the electrolyte presents further proof that it is a hydration process which reduces anode film effectiveness.

Illustrative of the variation in pH value of the electrolyte with ammonia concentration is the following graph which is based on a boric acid content of 5 grams of boric acid to 100 c.c. of water and a temperature of 25° Centigrade.

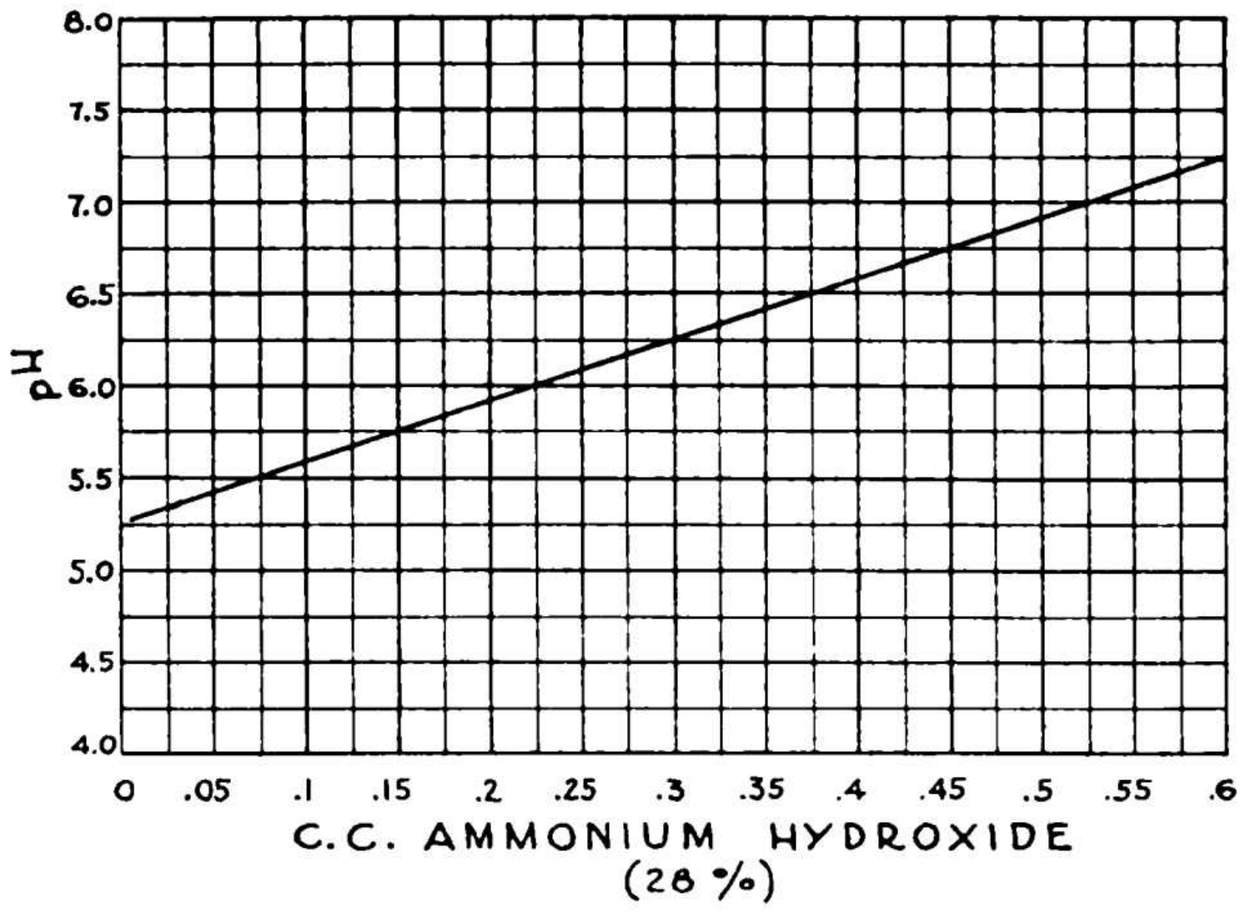

Since all wet electrolytic capacitors are subject to some weakening or deterioration of the anodic film during idle shelf periods, it is important that the rate of such deterioration be kept as low as possible. The importance of this is readily recognized by radio engineers because the resulting high initial values of leakage current caused by a high rate of film deterioration may possibly result in damaged rectifier tubes, power transformers or even destruction of the capacitor itself.

It has been observed that the approximate rate of film deterioration or "shelf life" of a wet electrolytic

Digitized by Google Original from UNIVERSITY OF MICHIGAN

capacitor can be ascertained by a comparatively short accelerated test. Such a test is made possible by the observed fact that, on idle shelf life, the rate of film deterioration increases with ambient temperature increases. Thus, an accelerated test for idling shelf life characteristics can readily be obtained by subjecting the capacitor to some temperature, below the boiling point of the electrolyte, for a definite period of time. Tests have shown, for example, that the subjection of a wet electrolytic capacitor to a temperature of 85° Centigrade for one hour produces effects equivalent to one month of idle shelf life at normal room temperature.

The effects of this test are manifold because in addition to an increase in the rate of actual film deterioration a check is obtained on the quantities of impurities occluded in the various parts of the entire capacitor structure.

The graph on page 78 serves to illustrate the "recovery" leakage current characteristics of capacitors after an idle shelf period of 6 months.

Curve A shows the leakage recovery characteristics of a capacitor with a high rate of anodic film deterioration. Curve B shows the effects of a lower rate and Curve C the typical leakage recovery characteristics of a satisfactory wet electrolytic capacitor correctly designed and fabricated. Curves A and B represent poor leakage recovery characteristics because curve A represents a capacitor incorporating the use of an electrolyte of a pH value of 7.1 and curve B represents a capacitor incorporating the use of an anode with a film improperly formed initially.

Digitized by Google Original from UNIVERSITY OF MICHIGAN

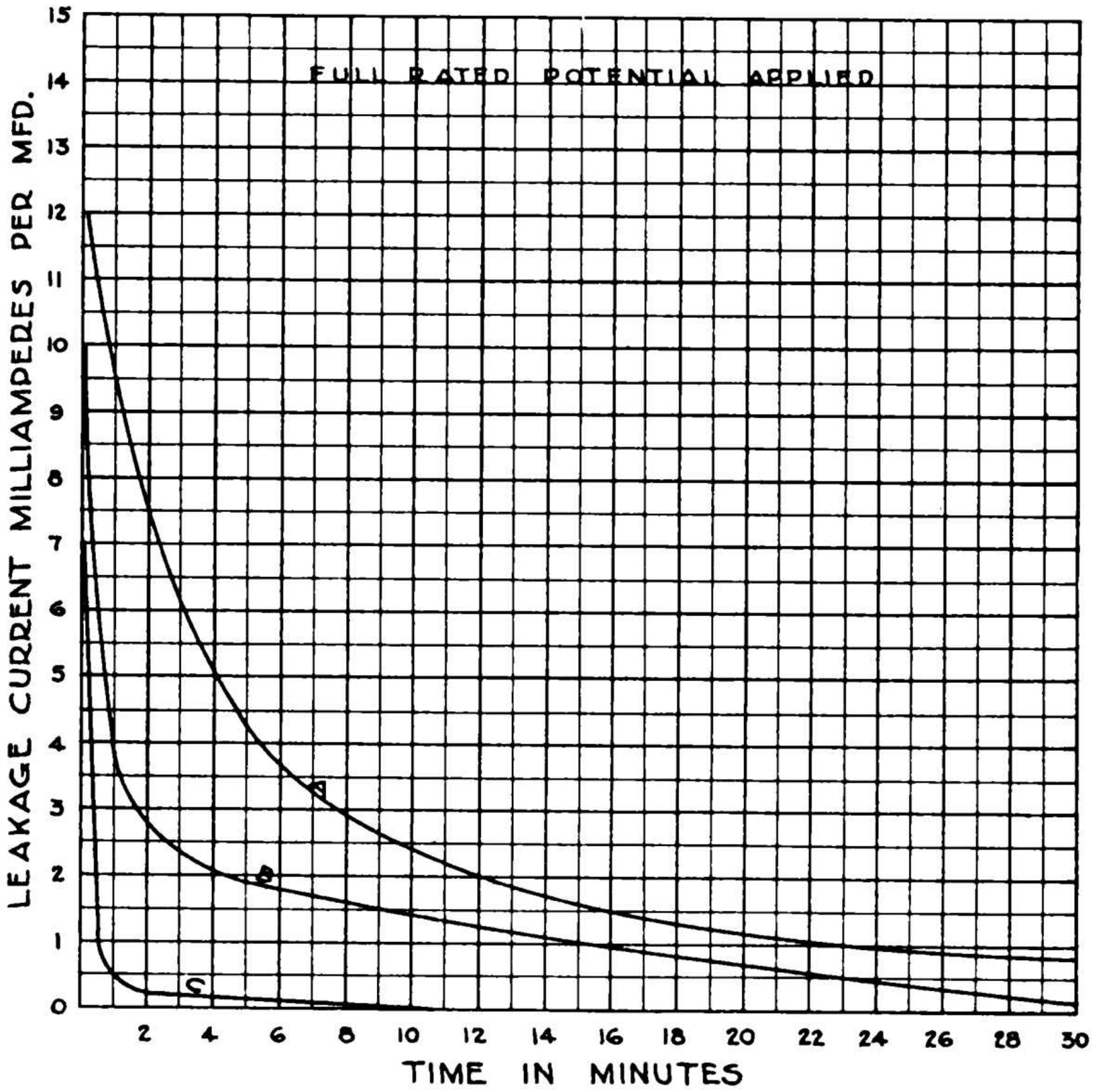

3. Life

Wet electrolytic capacitors, if properly designed and carefully fabricated, will show very little change in essential characteristics when operated continuously or semi-continuously, at normal rated voltages. To illustrate actual results of such continuous operation reference may be made to the graph on page 79.

4. Operating Limitations

It has been previously mentioned, under the subject of containers, that both plain aluminum surface

Digitized by Google Original from UNIVERSITY OF MICHIGAN

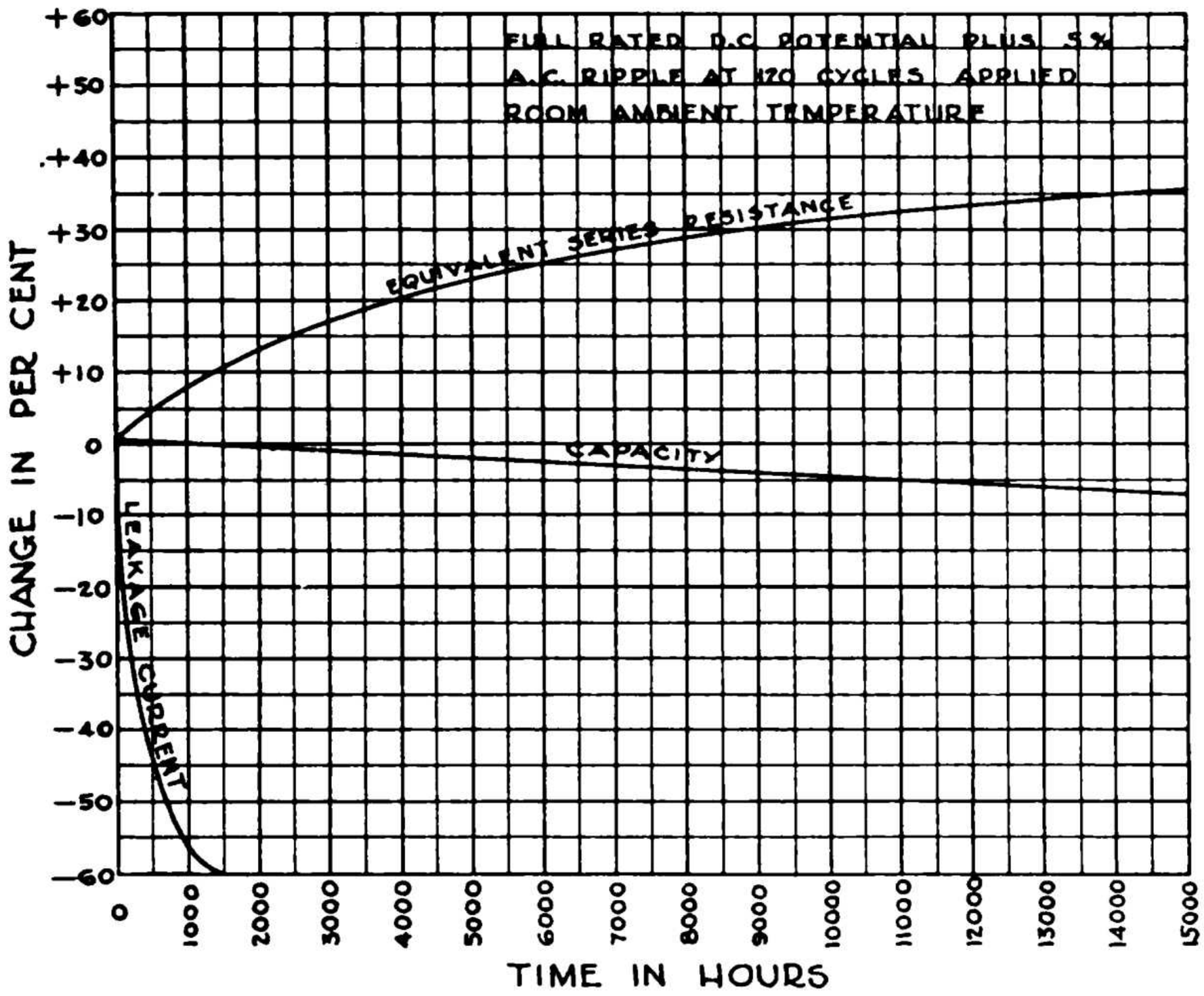

containers as well as those with an inside chromium plated surface were in common use. The question is then in order as to when should one or the other type be used. There are two factors which determine the type of container that should be employed in order to obtain the most stable characteristics for wet electrolytic capacitors. These generally are:

1. The magnitude of the alternating current component passed by the capacitor.
2. The effect of the alternating current component on the stability of the characteristics of the capacitor.

In a plain can construction the alternating current compound must be maintained at a relatively low value; otherwise, the interior can surface may be formed or filmed by the alternating current voltage. Such a formation effectively produces a capacitance in

Digitized by Google Original from UNIVERSITY OF MICHIGAN

series with the main capacitance of the capacitor which results in a reduction in the capacity of the unit as a whole. This change does not always become immediately effective, but is a function of several variables such as the reverse (alternating current component) current density at the inside container surface; temperature of electrolyte, ion concentration of electrolyte, and time of application of the reverse potential. For a given capacitor the alternating current component voltage will determine the reverse current density and hence the change in total capacity.

By experience, it has been found that the total capacity reduction, from nominal values, can be limited to a reduction of approximately 10 per cent if the following values of alternating current component are considered as the maximum allowable:

Can Diameter	*Can Length*	*Alternating Current Component*
1″	4½″	35 milliamperes
1⅜″	4½″	65 milliamperes
1½″	4½″	75 milliamperes

If cans of a length shorter than the nominal length of 4½″ are used, then reductions in the indicated maximum alternating current component values must be made in proportion to the reduction in area of the inside container surface.

The desired object in coating or plating the inside surface of the can or container with chromium is to prevent the formation of an anodic or dielectric film on that surface. This object is obtained to a considerable

Digitized by Google Original from UNIVERSITY OF MICHIGAN

degree due to the fact that chromium is not film forming as it does not readily oxidize. Chromium is also used because it can be satisfactorily plated on aluminum and remains reasonably inactive in relation to the normally employed electrolytes.

If a can is therefore chromium plated on the inside surface, the alternating current component is limited only, as a general rule, by the amount of heat a given capacitor will satisfactorily dissipate, without causing an increase in the leakage current to an extent that a self destructive heat cycle results.

Based on a maximum operating equilibrium temperature of 50° Centigrade and with normal rated working voltages applied, the following maximum values of alternating current component can be satisfactorily used:

Can Diameter	*Can Length*	*Alternating Current Component*
1″	4½″	125 milliamperes
1⅜″	4½″	200 milliamperes
1½″	4½″	225 milliamperes

In the use of chromium plated containers one undesirable feature has been noted and that is, direct current potentials cannot be applied to the capacitor in the reverse direction. It is found that if the can is made positive and sufficient current flows through the structure, the chromium will be removed from the can surface and will go into chemical solution with the electrolyte forming a chromate salt. Out of the resulting solution, chromium may be plated on the anode surface

Digitized by Google Original from UNIVERSITY OF MICHIGAN

thus rendering the capacitor useless for further operation. It has been found that this entire cycle of destruction requires only 15 seconds if the direct current, in the reverse direction, is of the order of 100 milliamperes.

5. Regulating Type of Wet Electrolytic Capacitors

The leakage current characteristics of wet electrolytic capacitors are such that when a potential is applied which exceeds the value of the initial formation voltage of the anodic film a sharp increase in leakage current values is obtained. Advantage of this characteristic is taken in the design of a type of capacitor termed the regulating or self regulating type. The normal increase in leakage current with application of potentials in excess of formation voltages can be still further increased by two methods. In other words, the regulation can be increased; first, through the use of a low value of voltage of anodic film formation in connection with the use of a relatively high resistance electrolyte and second, through the use of a low voltage of anodic film formation with the use of a relatively low resistance electrolyte.

It is, however, general practice to rate regulating capacitors at an operating voltage at or slightly above the potential used in initially forming the anodic film. It is also common practice to specify the degree of regulation by specifying a maximum leakage current at the rated operating voltage and a minimum value of leakage current at a higher value of voltage termed the

Digitized by Google Original from UNIVERSITY OF MICHIGAN

regulating voltage. Usually the regulating voltage specified is 75 volts more than the rated operating voltage. The magnitude of increase in leakage current varies somewhat with the capacity and general type of capacitor.

The following illustration shows a series of curves wherein voltage variation and corresponding variations in leakage current values are noted for various film formation potentials.

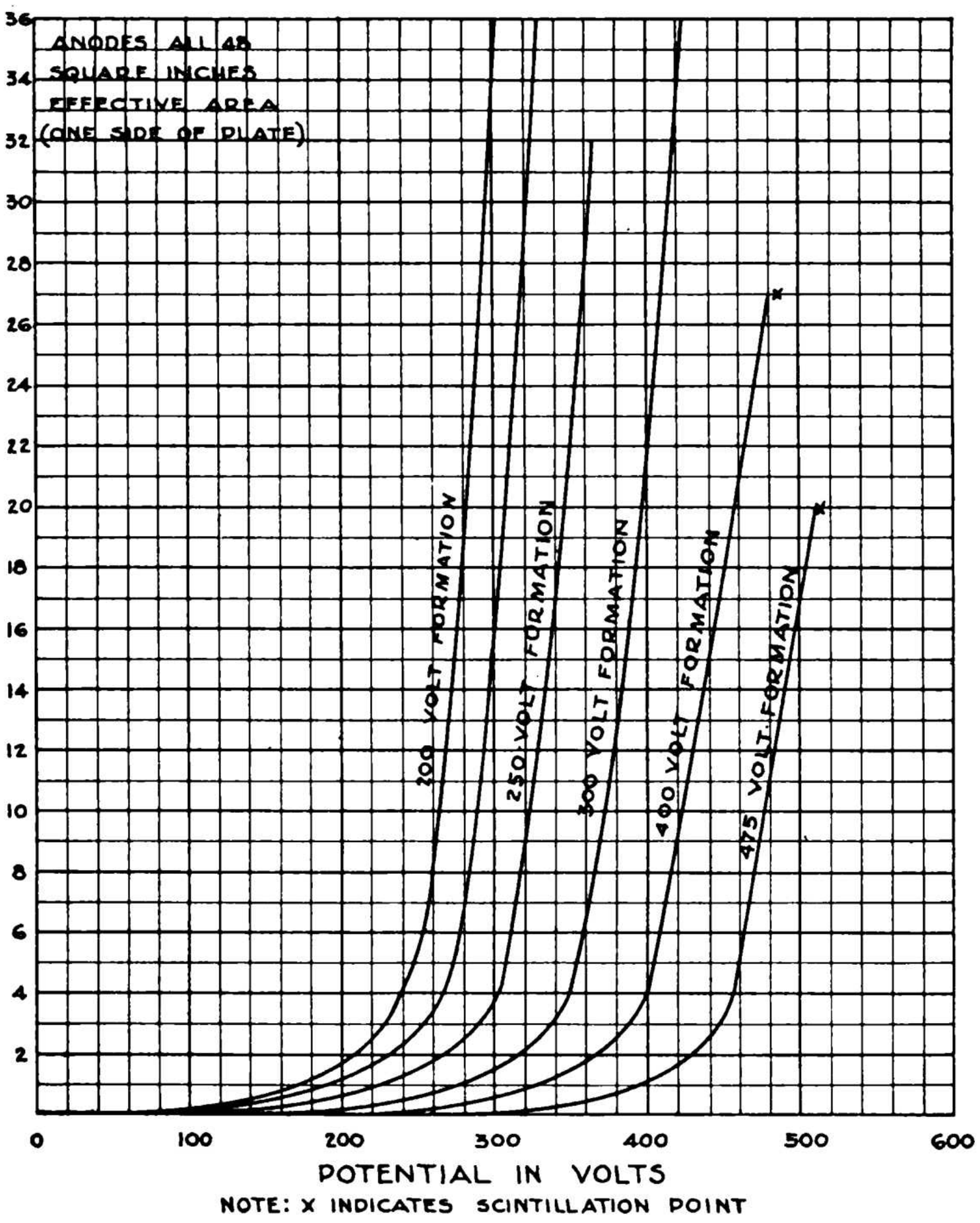

Digitized by Google Original from UNIVERSITY OF MICHIGAN

Chapter VII

THE DRY TYPE OF ELECTROLYTIC CAPACITOR

THE dry electrolytic capacitor is so designated because the electrolyte employed is of a non-aqueous nature and is therefore dry, in the sense of containing a very low water content.

It was as late as 1931 that the dry electrolytic capacitor was first developed to a state of commercial usefulness and even then the range of application was decidedly limited. Improvements have, however, been steadily made until today, the dry electrolytic capacitor has reached a comparatively high state of development.

The electrolytes employed in the dry electrolytic capacitor structures are not only non-aqueous but are more or less of low conductivity. This low conductivity of electrolyte necessitates certain basic physical changes in general structure.

In the wet electrolytic capacitor, the can or container serves to make electrical contact with the aqueous electrolyte but with the use of the non-aqueous electrolytes this type of construction will no longer function in a satisfactory manner. This obviously is due to the low conductivity of the non-aqueous electrolyte which would, in turn, result in too great an increase in the resistance equivalently in series with the capacitor. To overcome such a difficulty, it is necessary to

Digitized by Google Original from UNIVERSITY OF MICHIGAN

make the first basic change in physical structure which exists between the wet and dry types of electrolytic capacitors.

This change in structure consists of providing a plate or foil which serves to make electrical contact with the electrolyte in such a manner as to reduce the mean resistive path to a minimum value.

An enlarged cross-sectional view of such an arrangement is shown in the following illustration:

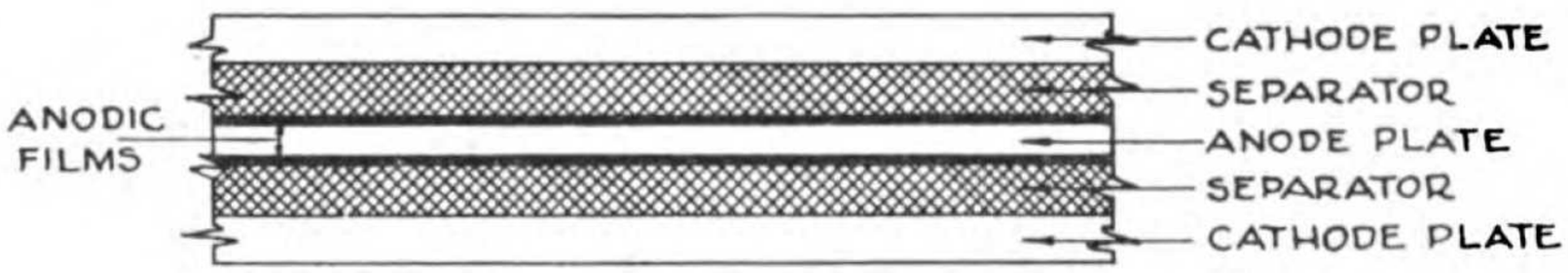

An examination of this cross-sectional view discloses the fact that on each side of the anode plate there is a metallic plate which lies parallel to it and that between these metallic plates and the anode plate there is a separating medium which is saturated with the nonaqueous electrolyte. Such a metallic contact plate is called the cathode plate because it serves to make electrical contact with the actual cathode member, the electrolyte.

The electrolyte proper will not normally serve as a physical separating medium between the dielectric film of the anode plate and the cathode plate so it has become common practice to use certain absorbent materials to provide the necessary space for the electrolyte. This absorbent material is normally in the form of thin sheets or layers which are called the separators. These separators are saturated with the electrolytes employed.

Digitized by Google Original from UNIVERSITY OF MICHIGAN

Dry electrolytic capacitors could be constructed by stacking, one layer on top of the other: anode, electrolyte saturated separator, cathode, another separator, another anode and so on. This procedure is seldom, if ever, employed because of economical reasons and other equally important factors.

The basic form of construction, which is today almost universally followed, consists of rolling up or winding two separators, the anode plate and the cathode plate into a concentric roll. This basic form of construction is shown in the following illustrations:

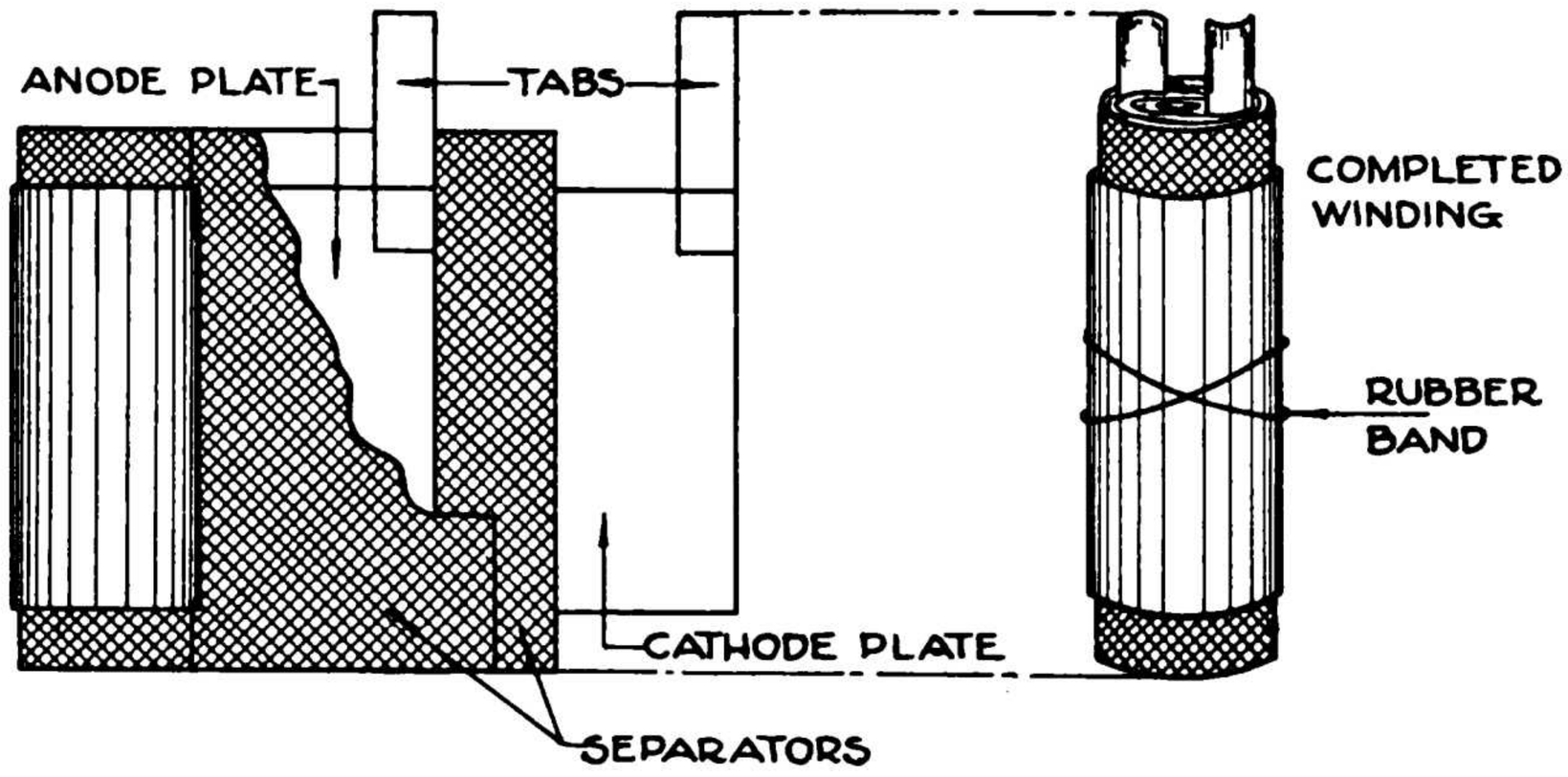

From these illustrations it can be noted that anode and cathode plates are of the same width and that the separators are wider than the anode and cathode plates. It can also be noted that the cathode plate is so placed as to be on the outside and completely encircle the winding. Obviously this is done to provide complete coverage of both sides of the anode plate and its dielectric film. It can be further noted from the illustrations that a means has been provided for making

Digitized by Google Original from UNIVERSITY OF MICHIGAN

external electrical connections to both anode and cathode plates in the form of projecting portions of the plates. These projections are called anode and cathode tabs, respectively.

The following sketches serve to show some of the more common methods of cutting and folding anode or cathode plates to form these tabs:

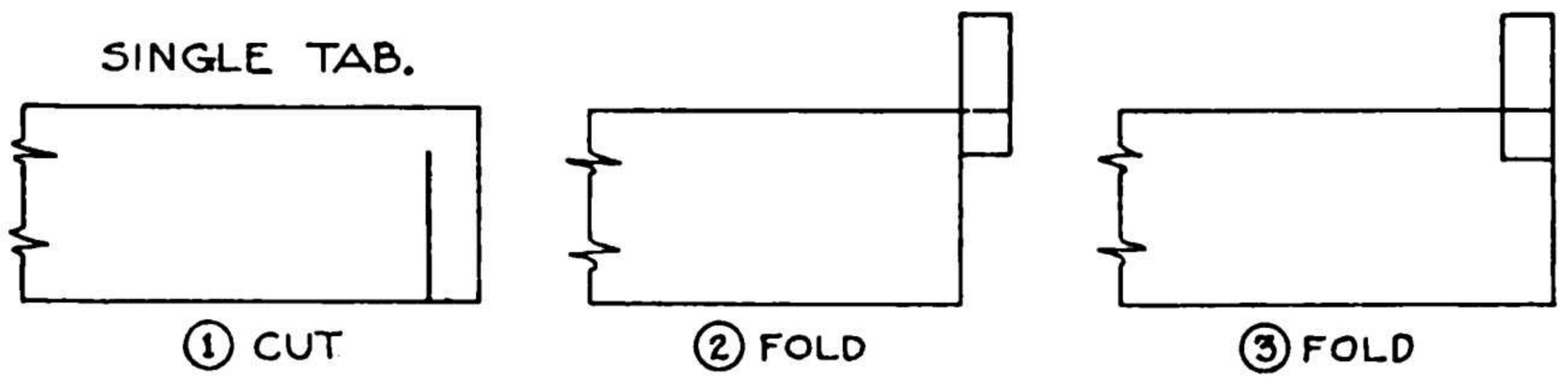

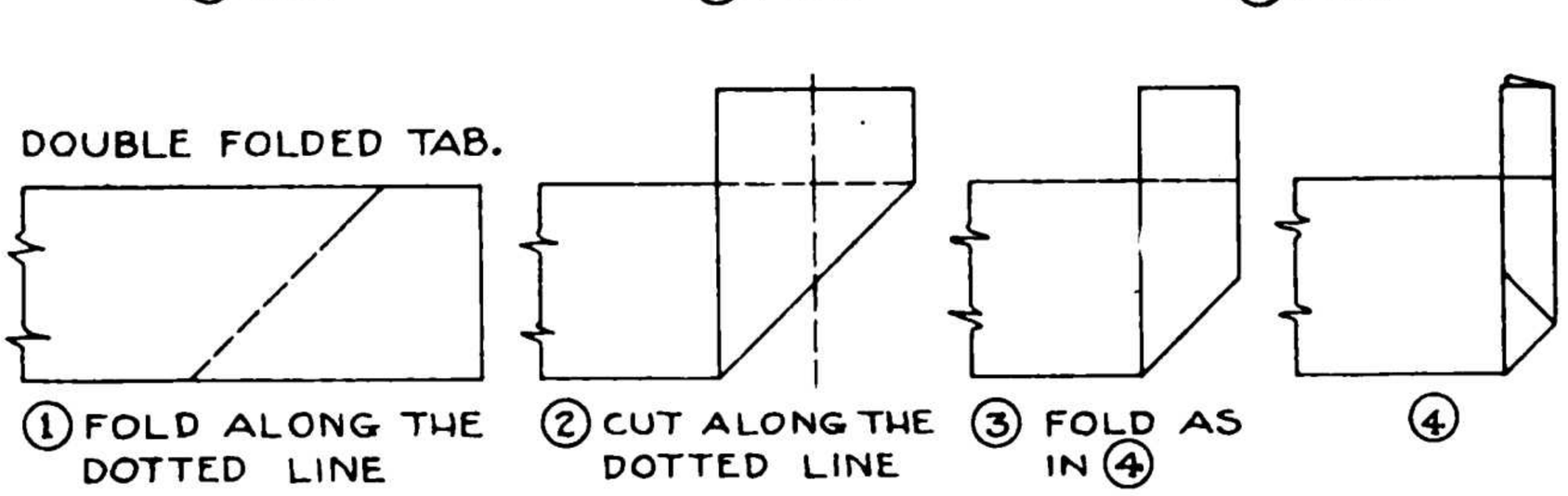

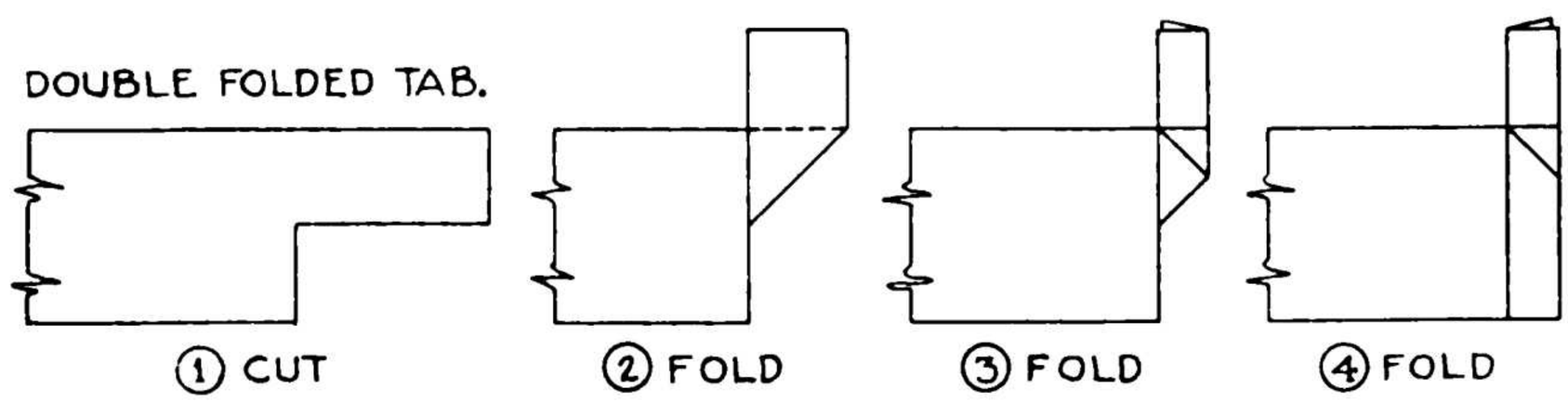

So far it can be seen that the dry electrolytic capacitor basically consists of the four following elements:

1. The anode plate
2. The cathode plate
3. The separators
4. The electrolyte

Digitized by Google Original from UNIVERSITY OF MICHIGAN

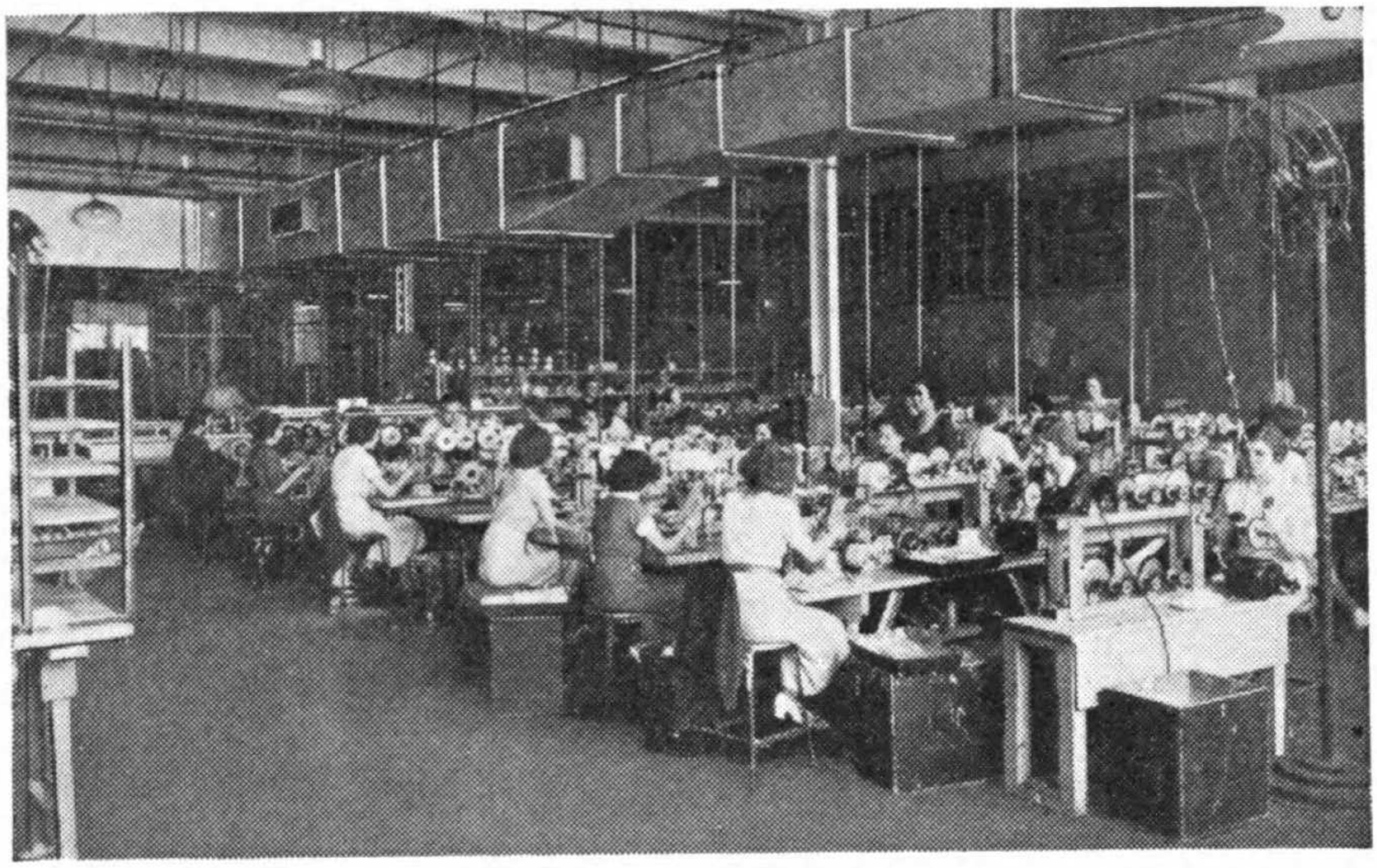

(Courtesy Cornell-Dubilier Electric Corp.)

Winding of dry electrolytic capacitors.

1. Anode Plate

The anode plate usually consists of a strip of high purity aluminum foil of a thickness which may vary from 0.0015″ to 0.005″ and of a width which may vary from one half inch to 5 inches.

The aluminum foil is usually supplied from the mill in 5″ to 10″ rolls specially packed to prevent mechanical injury or chemical contamination.

The aluminum foil is supplied dead soft (fully annealed) and a smooth, bright mirror-like surface is most desired. This surface, to be entirely satisfactory, must be entirely free from oil or grease, especially in the thinner sizes. For this reason, it has been found to be highly important that the lubricants used in the rolling mill operations be vegetable oils such as cocoanut or palm oil so that should any quantity remain on the foil sur-

Digitized by Google Original from UNIVERSITY OF MICHIGAN

face it can easily saponify with alkali solutions in processing operations. Rolling mill lubricants should also be selected for the type which will most completely volatilize during annealing operations without leaving any carbon or oxidation products on the foil surface.

This is particularly important in connection with the thinner foils because they are generally anodically formed without any preliminary cleaning of the surfaces.

The purity of the anode foil is very important and the aluminum content should never be below 99.8%. Higher purities are very desirable and aluminum contents of 99.85% and 99.9% produce marked improvements in dry electrolytic capacitor characteristics. For reasons of economy, however, a purity of 99.8% aluminum content is normally employed.

In the construction of dry electrolytic capacitors both plain and etched surface anode foils are used, the thinner foils of from 0.0015″ to 0.002″ thick being used for plain surface structures and the thicker foils of from 0.003″ to 0.005″ thick being used for etched surface structures.

2. Cathode Plate

The cathode plate also consists of a strip of dead soft aluminum foil of widths matching the widths of anode foil employed. The purity of the cathode foil, however, is relatively unimportant and the aluminum content generally runs not more than 99.3%. In fact, in some instances it may be found desirable to use a cathode foil of even lower aluminum content.

Digitized by Google Original from UNIVERSITY OF MICHIGAN

The cathode foil surface must also be free from oil, grease or oxidation products for two reasons; first, to keep electrical contact resistance with the electrolyte at minimum values and second, to prevent any chemical contamination of the electrolyte in finished dry electrolytic capacitor structures.

The thicknesses of cathode foil, generally employed, range from 0.0015″ to 0.0025″. Attempts to use thinner cathode foils have been frequently made but with varying degrees of success due to difficulties encountered in obtaining satisfactory tab connections. Certain advantages, on the other hand, have been claimed for the use of very thin cathode foils and this phase of the matter will be more fully mentioned in later paragraphs.

3. Separators

From about 1931 to 1934 it was almost common practice to use separators consisting of cotton gauze very similar to cheese cloth or bandage material. The mesh of this cotton gauze was, on the average, 44 by 40 although both finer as well as coarser meshes were commonly employed. The average over-all thickness of the gauze separator was approximately 0.008″. This thickness was reduced in some cases to approximately 0.005″ by a process of calendering similar to that process used in the fabrication of paper.

Ordinarily, one thickness of gauze was used between anode and cathode plates but in some instances a double thickness (2 layers) was employed in an at-

Digitized by Google Original from UNIVERSITY OF MICHIGAN

tempt to obtain higher voltage dry electrolytic capacitor structures.

The average width of gauze separator was such as to produce a margin of from 1/8" to 3/16" on each side of the anode and cathode plates in order to minimize mechanical touching of the foils and at the same time allow for slight variations in foil alignment during the winding of capacitor assemblies.

Since 1934 the employment of the gauze type of separator has practically been abandoned and today the cellulose or paper type of separator is almost exclusively used.

This type of separator consists of thin sheets of specially fabricated paper or cellulose of extremely high purity, from a chemical standpoint, and of high absorbent qualities from a physical standpoint.

The better grades of cellulose separators are fabricated from selected cotton rag stock although certain quantities of other materials such as kapok, jute or hemp may be added to the basic cotton rag pulp. Straight wood pulps, especially those of the sulphited processes such as kraft, are especially avoided.

Cellulose separator materials are especially fabricated for high chemical purity with particular efforts being made towards the complete elimination of soluble chlorides, sulphates, nitrates, resins, heavy metals and conducting particles such as carbon.

The total thickness of cellulose separator employed between anode and cathode plates will vary with the voltage rating of the capacitor structure and the type of electrolyte employed but, on the average, this total thickness varies from 0.003" to 0.008" in con-

Digitized by Google Original from UNIVERSITY OF MICHIGAN

nection with capacitors rated at from 6 volts to 600 volts respectively.

Some degree of success has been obtained with the use of separators consisting of thin sheets of regenerated cellulose such as cellophane but this type of material is generally employed in combination with a layer of cellulose due to the relatively low absorbency characteristics of the cellophane. Certain advantages are claimed for this type of material and further details will be covered in subsequent chapters.

Various combinations of all types of separators are sometimes employed in order to obtain certain results or characteristics in completed capacitor assemblies.

4. Electrolytes

The electrolytes employed in dry electrolytic capacitors range physically from highly viscous liquids to semi-hard crystalline masses but chemically they range over a wide and to some extent unexplored territory.

The more commonly used electrolytes are compounds or mixtures such as glyco-ammonium borates, glycerol-ammonium borates, ammonium acetates-ammonium borates, ammonium lactates, amine acetates, amine borates and literally hundreds of similar chemical combinations the more important of which will be described in detail later on.

Regardless of the specific chemical composition of the electrolyte employed there are certain fundamental factors which cannot ever be overlooked and these are that satisfactory performance can only be obtained

Digitized by Google Original from UNIVERSITY OF MICHIGAN

from relatively narrow operating limits of pH value, water content and conductivity.

While it is true that a dry electrolytic capacitor structure is not as subject to corrosion difficulties as a wet electrolytic capacitor, nevertheless the same precautions are found necessary in regard to freedom from contaminating agents, particularly chlorides, in the electrolyte and chemicals used in preparing it.

In dry electrolytic capacitors the electrolytes are occluded into the separator materials and there are a number of ways of saturating this separator material with the electrolyte. Among these methods, soak impregnation, vacuum impregnation, and centrifugal impregnation are the most commonly used ones. For that reason, electrolytes must frequently, not only possess certain chemical and electrical characteristics but certain physical characteristics as well, in order that they be adapted to certain impregnation methods.

Digitized by Google Original from UNIVERSITY OF MICHIGAN

Chapter VIII

THE FABRICATION OF DRY ELECTROLYTIC CAPACITORS

Anode Foils, Plain and Etched Types

PLAIN foil anodes are not given any preliminary cleaning or other treatment prior to the formation of the anodic film on the surfaces because high purity aluminum foil is commercially available with surfaces sufficiently clean that additional cleaning is unnecessary.

Etched Type of Anode Foil

In addition to the etching methods already described there are a number of procedures more definitely adapted to the etching of the anode surface of foils intended for use in dry electrolytic capacitors.

Mechanical methods of etching or roughening of the surface, having proven less satisfactory than chemical methods, will not be the subject of further description.

In order to facilitate the handling of the material in subsequent formation and winding operations, it is very desirable, if not absolutely necessary, that the anode foil be etched continuously.

By continuous etching is meant the continuous passage of the anode foil through the various steps which constitute the etching process and its rewinding into a roll.

Digitized by Google Original from UNIVERSITY OF MICHIGAN

Basically, the methods of chemically etching or roughening the anode foil surface, already described, remain the same. Certain other factors however must be considered, the most important being the control of the actual degree of etching.

The following diagram illustrates the form of a typical etching system:

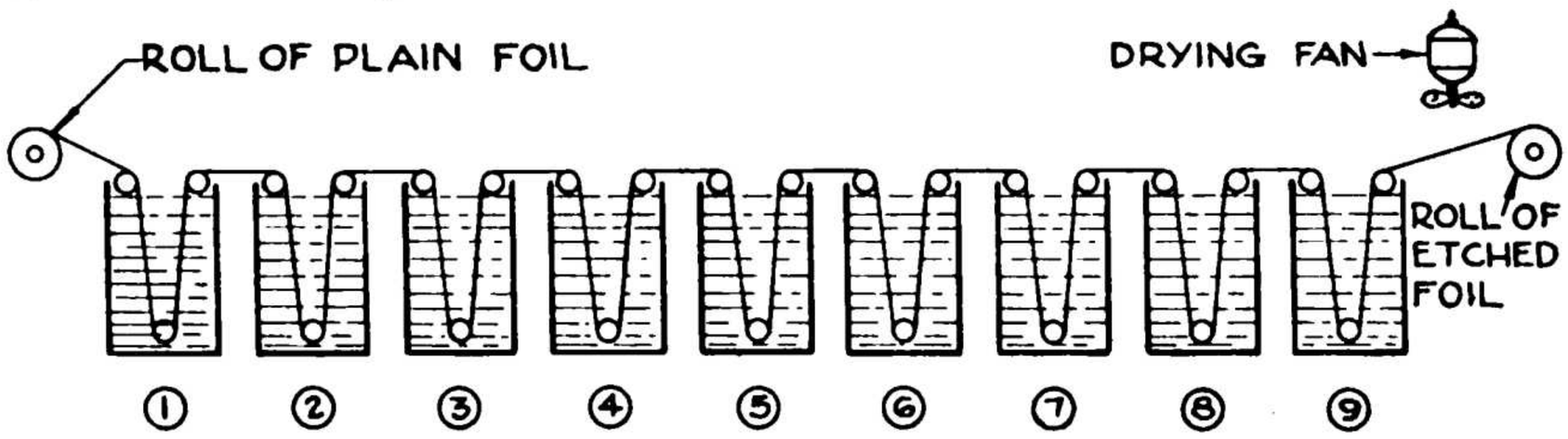

1. Sodium Hydroxide cleaning (hot)
2. Tap water wash (cold)
3. Etching solution (hot)
4. Tap water wash (cold)
5. Nitric acid wash (warm)
6. Tap water wash (cold)
7. Distilled water wash (cold)
8. Distilled water wash (cold)
9. Distilled water wash (hot)

It can be seen that in a system of continuous etching, the anode foil passes through a series of tanks or vats which contain the different materials needed for the corresponding steps in the process.

As the effectiveness of the etching procedure is subject to certain variables, means must be provided to control these variables. The effective variables have been shown to be as follows:

1. Concentration of etching solution
2. Temperature of etching solution
3. Time of immersion of foil in etching solution

Digitized by Google Original from UNIVERSITY OF MICHIGAN

Cleaning operations are subject to the same set of variables and therefore the sodium hydroxide and nitric acid washes are affected by the following factors:

1. Concentration of acid or alkali solutions
2. Temperature of solutions
3. Time of immersion of foil in solutions

If known and desired results are to be obtained these three basic variables must be controlled to within very narrow limits of variation.

Once the correct time of immersion, in any given solution of any given concentration and temperature, has been determined, it can easily be fixed by fixing the rate of linear travel of the foil through the system of tanks, adjusting the physical size of each tank so that the foil remains immersed in each tank the correct proportionate time.

Temperature is more difficult to control, especially the temperature of the more common acid etching solutions, because the chemical action of the etching operation usually produces a large amount of heat. Very elaborate systems of thermostatically controlled cooling coils or chambers are usually employed to dissipate this heat energy.

Concentration of solutions is usually maintained by allowing fresh solution to run into the solution being used at such a rate as to exactly replace or balance those chemicals being used up, overflowing the surplus. In continuous types of etching set-ups, the wash tanks are rapidly contaminated or "loaded" with chemicals and the usual procedure is to have the wash tanks continuously overflow, fresh water being continually flowed

Digitized by Google Original from UNIVERSITY OF MICHIGAN

into the tanks. To further prevent carry over of contaminating chemicals from wash tanks into solution tanks, wash tanks are usually equipped with spray washes of fresh water at the point of exit by the foil from the wash tanks.

The etched foil is usually dried thoroughly, with a blast of warm air, as it emerges from the last wash tank prior to being rewound into a tight, smooth roll.

As the etched foil generally goes directly into the process of anodic film formation without additional cleaning, it is important that the washing process, after etching, be sufficiently effective as to remove the last trace of etching or cleaning chemicals.

In order to minimize the formation of aluminum hydroxide on the etched surface, the last distilled water washes are frequently acidified slightly with boric acid. This procedure has been found very effective in reducing the amount of hydrolysis, especially when the distilled water wash is heated.

The three basic methods of chemical etching; namely, hydrochloric acid, hydrochloric acid and copper chloride, and copper chloride solutions are all readily adaptable to the continuous etching procedure. Furthermore they are in general use.

It has been found that if the anode foil, while immersed in the etching solution, is made the positive electrode with respect to another electrode immersed in the same etching solution, an accelerated attack is obtained. This accelerated action is the result of the chlorine ions (in the case of hydrochloric acid) being attracted or driven to the anode foil surface by the electrical potential applied. This principle is frequently

Digitized by Google Original from UNIVERSITY OF MICHIGAN

employed in a system of etching, termed electrochemical etching. In the employment of such a system, it has been observed that a wide variation in the pattern and depth of attack can be obtained with variations of solution concentration, current density and applied potential. This method has one drawback and that is the anode foil being etched, must be of a certain minimum cross section in order that the high values of current required, can be carried without actually melting the foil in question.

In still other methods of etching, the same principle of accelerated action is obtained without the application of an electrical potential from external sources.

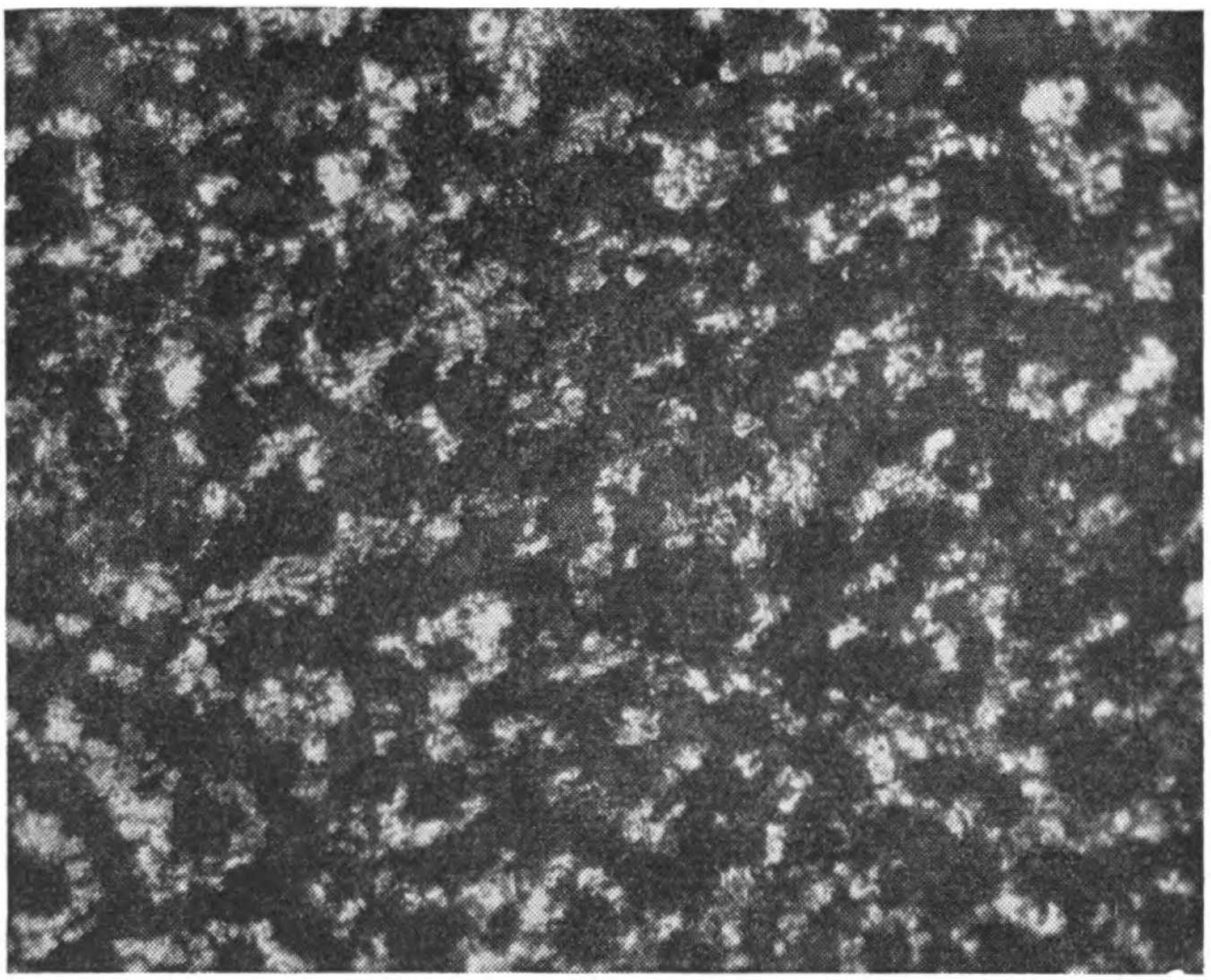

Photomicrograph of electrochemically etched anode foil. Magnification 50 times.

Digitized by Google Original from UNIVERSITY OF MICHIGAN

This is accomplished by a simultaneous generation of potential during the actual etching.

One illustration of such electrochemical action is the method of etching previously described wherein an aqueous solution of copper chloride is employed. In this case the aluminum tends to dissolve into solution and copper in turn plates out of the solution onto the aluminum surface. This coating of copper is not firmly bonded to the aluminum surface and the result is a galvanic cell structure. The electrical potentials resulting from such a galvanic couple attract the chlorine ions to the aluminum surface with the result that the over-all etching action or rate of attack is accelerated to violent proportions.

Another system of continuously etching anode foil is to pass the foil through an etching solution with its surfaces held in close contact with two metallic screens. These screens are of comparatively fine mesh and the metal forming the screens is so selected as to promote galvanic action. Also, the metal forming the screens is selected for its position in the electrochemical series where it is best suited for minimum attack by the chemicals of the etching solution. In general, it has been observed that the most satisfactory characteristics of etch are obtained where the galvanic couple formed by the anode foil, the screen and the etching solution generates a potential difference of approximately 0.5 volts.

Copper screens and an etching solution of hydrochloric acid provide a fairly satisfactory combination.

As a general rule, the screens are used in the form of two endless belts which pass slowly through the

Digitized by Google Original from UNIVERSITY OF MICHIGAN

etching solution, carrying the anode foil between them. Such a system is illustrated in the following illustration.

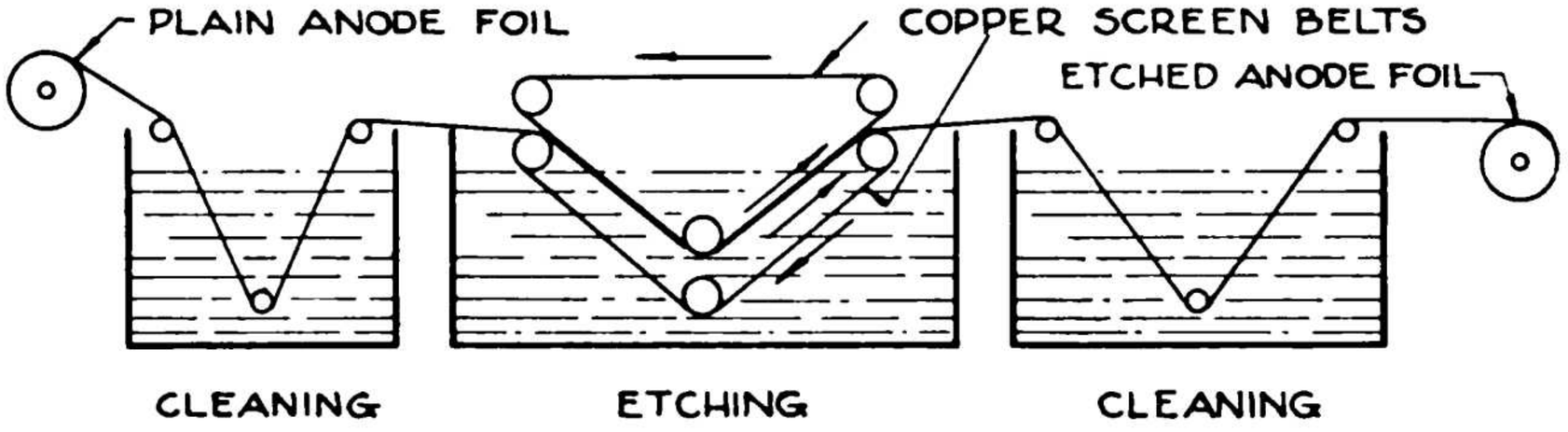

With this system of etching, and using a hydrochloric acid solution of approximately 25% (1 part acid to 3 parts water by volume) at or near a temperature of 40° centigrade, the etching time has been observed to be approximately one minute.

The more or less conventional method of cleaning with a hot solution of sodium hydroxide with tap water rinse precedes the actual passage of the foil through the etching solution. After etching, the also conventional treatment, of washing in nitric acid and succeeding washes of tap and distilled waters, is necessary. This type of etch is readily recognized by the outline pattern of the screen which appears on the etched surface of the foil.

Utilizing the various systems of chemical etching which have been described, increases in anode foil surface area from four to ten times that of plain foil are obtained with foil thicknesses varying from 0.003″ to 0.005″.

In describing the various etching methods and procedures no mention has been made in regard to the actual mechanics of moving foils through etching and washing or cleaning operations. Neither has any men-

Digitized by Google Original from UNIVERSITY OF MICHIGAN

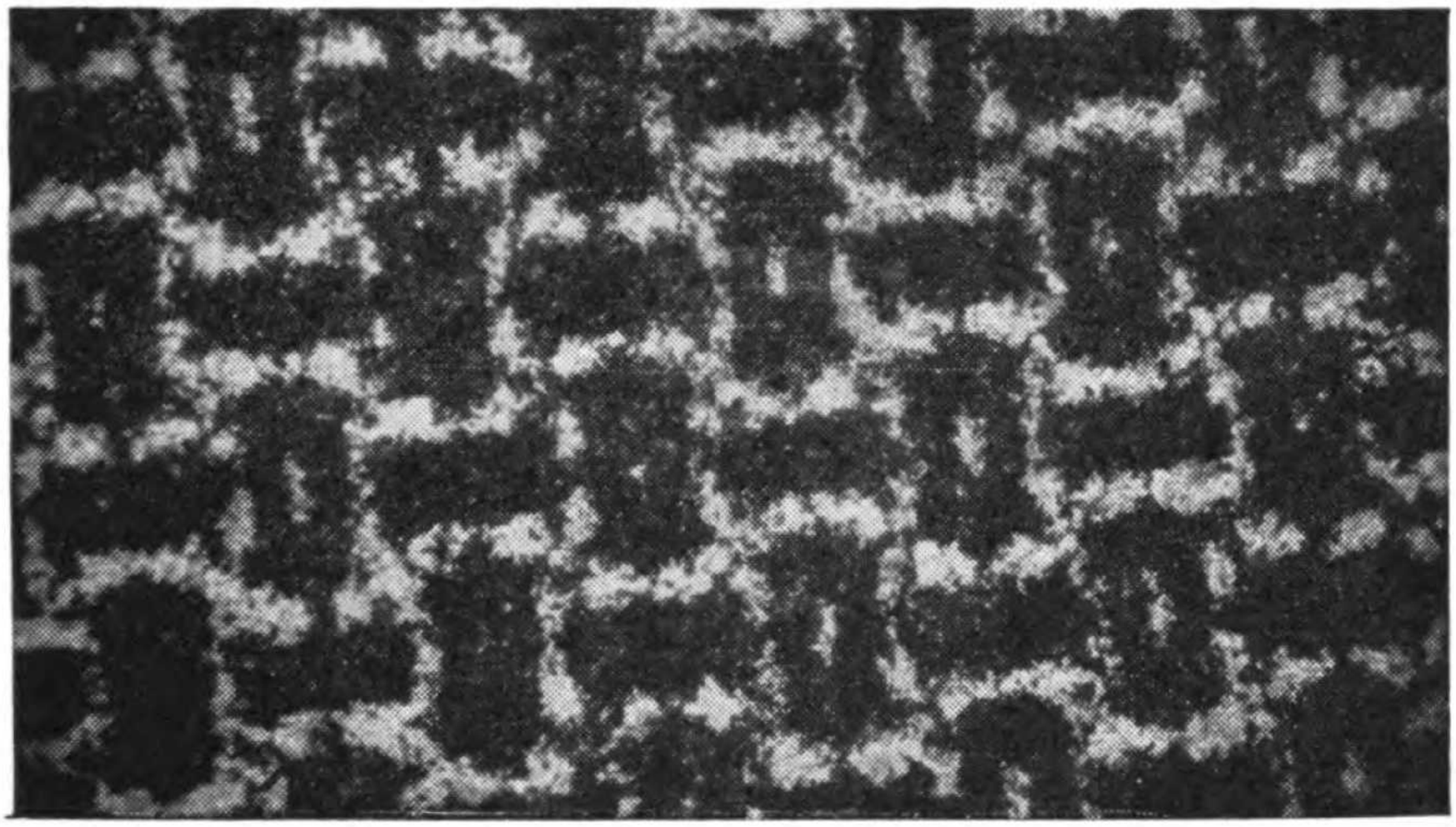

Photomicrograph of screen-pattern type etch of anode foil. Magnification 50 times.

tion been made of the problems involved in the selection of proper construction materials. Such details are comparatively simple problems in chemical and mechanical engineering and are therefore not believed to be within the intended scope of this book.

Metal Clad Type Anode Structures

A special type of anode structure has been developed wherein the use of aluminum foil has been replaced with cotton gauze which is coated with high purity aluminum. In such a procedure each thread that goes to make up the mesh structure of the gauze is coated with a layer of high purity aluminum and the result is a sort of lattice or screen of aluminum.

By this process a very large increase in effective anode surface area is obtained. This increase in anode surface area is proportional to the mesh of the gauze and the diameter or gauge of thread employed. In ac-

Digitized by Google Original from UNIVERSITY OF MICHIGAN

tual practice, two thicknesses of gauze are frequently employed and the mesh of the gauze ranges from 60 by 60 to 80 by 80.

The general method of coating the gauze with aluminum is to pass the gauze continuously through streams of aluminum being emitted from a number of spray guns. These spray guns are of the oxygen-acetylene burning type in which the aluminum is heated to a molten state and sprayed out with high pressure air.

After the gauze has been coated with aluminum, the material is anodically filmed by the same general methods used for filming or forming the more standard aluminum foil.

So far, this type of anode structure has been limited to the construction of dry electrolytic capacitors due to inherent difficulties in the form of small percentages of impurities occluded in the gauze. While such impurities do not affect a dry electrolytic capacitor structure they would render a wet electrolytic capacitor inoperative.

With the metal coated gauze anode structure it has been observed that the effective gain in anode surface area, over plain aluminum surface foil, is ten or more times at even the higher voltage ranges. The employment of such an effective gain in anode surface area results in a completed capacitor of very small physical size.

In commercial practice, however, a material reduction in physical size is not always desirable as such a reduction may frequently limit the range of application of the capacitor in question. This is especially true when a capacitor is used in a circuit network where an

Digitized by Google Original from UNIVERSITY OF MICHIGAN

appreciable alternating current potential is applied. Under such conditions the small physical size of the capacitor may be such as to be incapable of radiating the heat resulting from both alternating and direct current wattage losses.

One interesting phenomenon has been observed in connection with the use of anode structures of very high gain surface area increases and that is the effect of the corresponding reduction in the surface areas of the cathode foil.

As any electrolyte has resistance there is a voltage gradient established between anodic film, electrolyte path and cathode foil surface upon the passage of alternating current through the capacitor. The cathode foil does not become positive with respect to the anode polarizing potential but it may become positive with respect to the electrolyte immediately adjacent to cathode foil surface without affecting its negative value of polarization with respect to the anode. The net result is that the cathode becomes anodically filmed to the value of positive potential applied to it. The value of this potential is proportional to the resistivity of the electrolyte and the magnitude of the alternating current passing through the capacitor.

The effective voltage of formation of the cathode is always of the order of only a few volts and in plain foil structures does not measurably affect the over-all capacity of the capacitor due to the fact the effective capacity of the cathode foil surface is very high.

Where high gain anode surface areas are employed this effect of cathode formation is entirely different. In such structures, the cathode foil surface is

Digitized by Google Original from UNIVERSITY OF MICHIGAN

materially reduced and the result of even a comparatively low voltage of film formation produces a relatively low capacity. This capacity is effectively in series with the capacity of the anode; so if the value of capacity of the cathode formation is low the rated capacity of the unit will be reduced.

It has been observed that reductions in original capacity values of as much as fifty per cent occur under normal filter circuit applications where very high gain area, coated gauze anode structures are employed.

This effect is more noted with capacitor structures designed for the lower voltage applications.

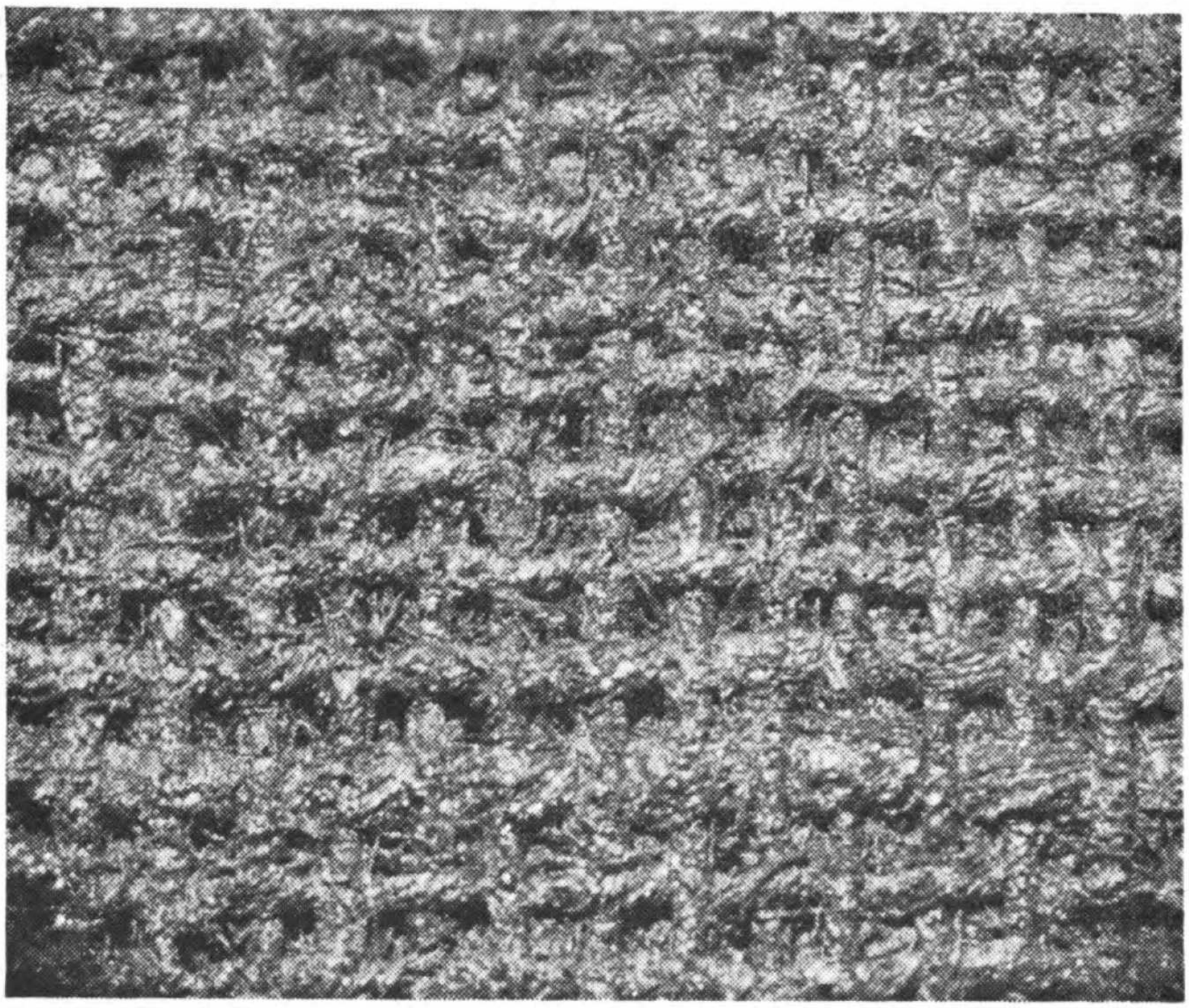

Photomicrograph of metal clad type of anode structure. Magnification 25 times.

Digitized by Google Original from UNIVERSITY OF MICHIGAN

Chapter IX

FORMATION OF THE ANODIC FILM

Still and Continuous Formation Methods

THE still formation methods of anodic film formation described as being used in the fabrication of wet electrolytic capacitors, apply equally to anodic film formations for dry electrolytic capacitors.

Although such methods were in common use a number of years ago they have since been discarded for the improvements obtained with continuous anodic film formation procedures.

In the still formation method, the anode foil was usually wound "zig-zag" fashion between aluminum pins which were in turn mounted in an aluminum frame but generally insulated from the frame by porcelain bushings. The aluminum frame with its load of anode foil was then placed into a copper or aluminum lined tank of electrolyte. The frame was also insulated from the tank. The aluminum foil was made the anode and the tank the cathode and the formation procedure carried out exactly in accord with that outlined as applying to the formation of the wet electrolytic anode assemblies with the exception that finished formation current densities did not have to be of the same low order of magnitude.

After formation, the frames were removed from the formation tanks and the foil had to be unwound from the frame pins by hand. Such a procedure pre-

Digitized by Google Original from UNIVERSITY OF MICHIGAN

sented many undesirable mechanical features as well as many undesirable problems of chemical contamination of the formed anode foil surface.

Although not now in use to any extent the still formation method is illustrated below:

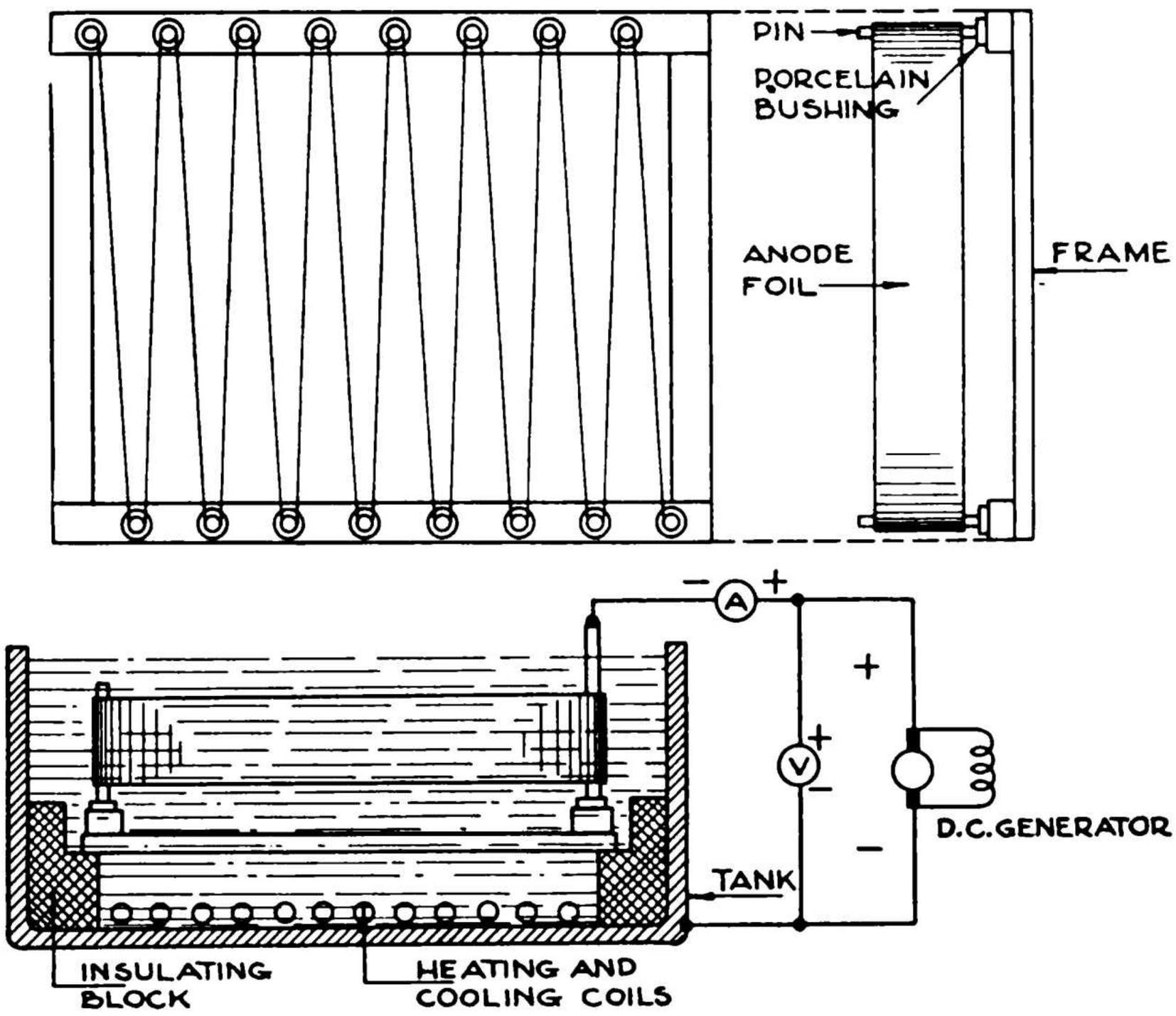

The above illustration shows the position of the frame, with foil in place, in the formation tank. Frame and pins were made of high purity aluminum and as a rule one or more foil supporting pins extended from the surface of the electrolyte for purposes of external electrical connection to the source of formation potential.

In the continuous method of anodic film formation, the anode foil is passed through one or more tanks

Digitized by Google Original from UNIVERSITY OF MICHIGAN

of electrolyte, at a fixed rate of travel and with a fixed value of formation potential applied at all times. Not only is the applied potential held at a constant value but the current also is maintained at a constant value.

As the anode foil progresses through the formation tank the actual potential applied at the foil surface and electrolyte juncture increases, in increments from a low value, in proportion to the potential drop through the electrolyte. The net effective result is that as the anodic film is progressively formed and the leakage current decreases, the actual applied potential increases to a mean value approximately equal to the voltage applied to the system. As a rule, this potential is reached when the anode foil has passed one third of the distance through the formation tank. As the foil progresses from this point, the potential remains constant and the leakage current continues to decrease until it has reached a predetermined low value by the time the foil exits from the tank. It can be readily seen that an automatic accomplishment is actually obtained of the same effective method employed in the previously described still formation procedure.

The size of the formation tank and the rate of travel of the foil through the tank governs the time period of immersion and formation.

The continuous method of anodic film formation possesses many inherent advantages over the still formation method in addition to the primary requirement of being able to anodically form foil in continuous strips of unlimited length. Voltage and current values can more readily be kept at desired constant values. Temperatures of electrolytes can be readily maintained at

Digitized by Google Original from UNIVERSITY OF MICHIGAN

constant values and the anode foil is not subject to contamination from handling. Also, any desired voltage of film formation can be instantly obtained by simply adjusting the applied potential to desired values.

The following illustration shows a typical continuous formation system.

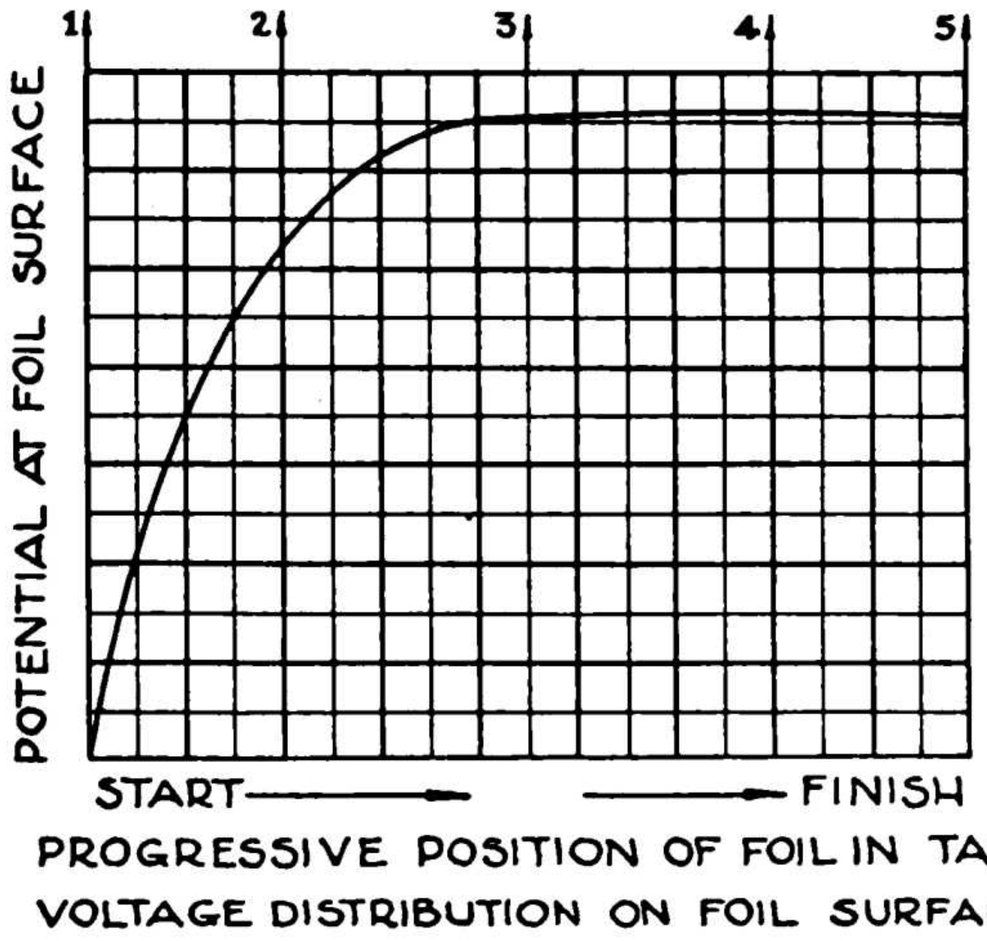

From the first illustration it may be seen that the anode foil first passes over a series of metal rolls which serve to make contact between the foil and the positive

Digitized by Google Original from UNIVERSITY OF MICHIGAN

terminal of the electrical power source. The foil enters and travels through the electrolyte by passing over a series of insulating rolls generally made of glass, porcelain, isolantite, bakelite or similarly satisfactory material.

The foil is generally drawn or pulled through the system by a pair of power driven rubber faced rolls in the form of a typical wringer mechanism such as is commonly used for laundry work. These rubber faced rolls also serve the purpose of squeezing surplus electrolyte from the surfaces of the foil. In most cases the foil then dries before being rewound into roll form. If not, a blast of warm air is used to provide the necessary drying action.

The tank is usually a wooden one lined with copper or aluminum depending on the chemical composition of the electrolyte employed.

Baffle plates are also frequently employed to reduce the resistive path, through the electrolyte, from the negative terminal of the power source to the anode foil surface. This is particularly true at the entrance part of the tank where the current drain is maximum. The baffle plates also serve to reduce electrolytic action on the tank walls.

Coils for either cooling or heating the electrolyte are also usually provided.

The insulating rollers are generally supported on an aluminum framework which fits inside the tank and this framework may also in turn support the baffle or cathode plates.

Where a single tank is used for continuous anodic film formation the system is termed a single formation.

Digitized by Google Original from UNIVERSITY OF MICHIGAN

The second figure shows in graphic form the voltage gradient or potential distribution on the foil surfaces as it progresses through the formation tank. The voltage gradient will obviously be shifted from right or left of the position illustrated in accord with changes in electrolyte resistivity and speed of anode foil travel through the system.

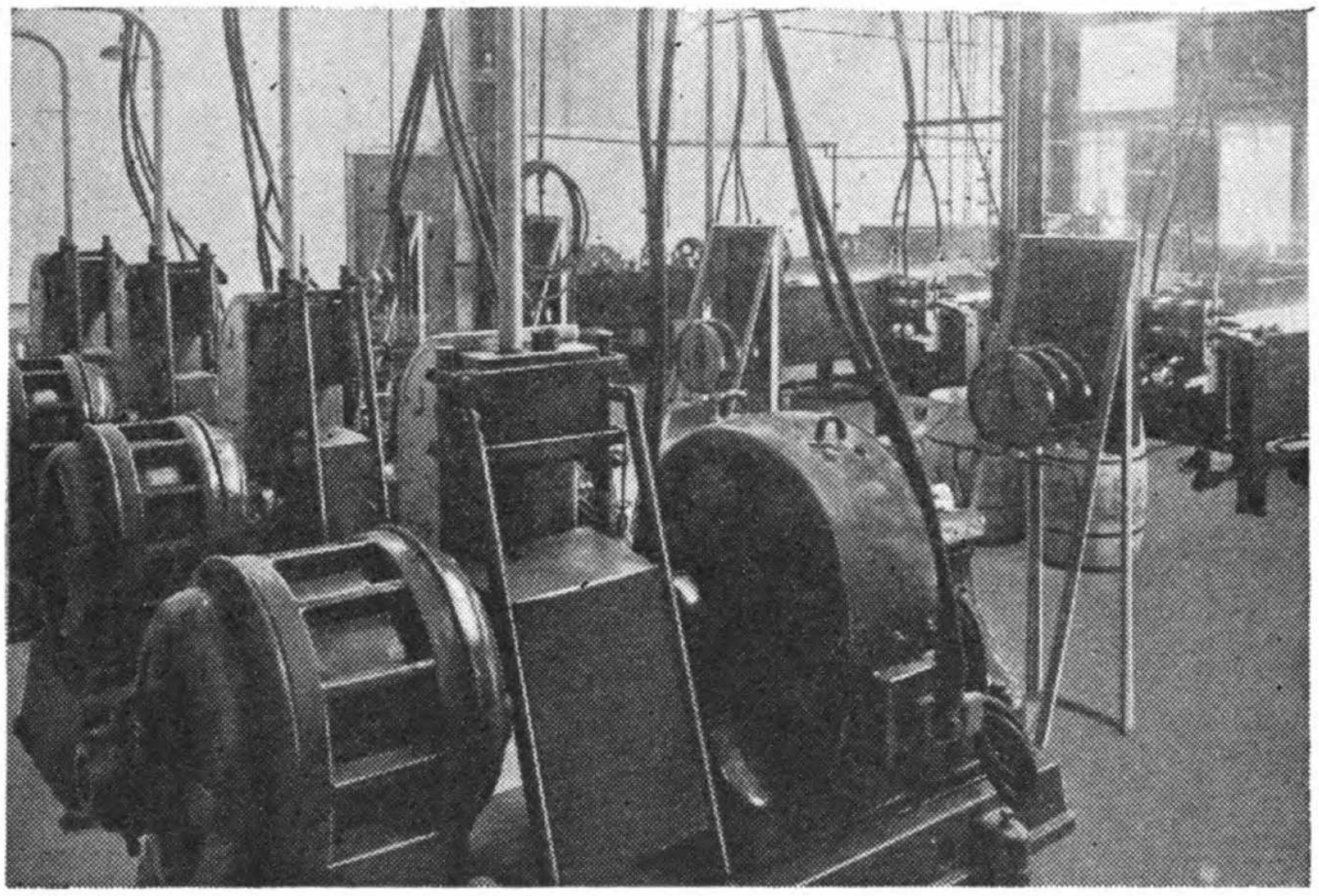

(Courtesy Cornell-Dubilier Electric Corp.)

Generator equipment and forming tanks for continuous anodic film formation.

Frequently more than one formation tank is employed for continuous anodic film formation and where this is the case the system is termed a multiple continuous formation method.

In the multiple system two or more tanks are used and the anode foil travels first through one formation tank then through a second or even third tank.

Digitized by Google Original from UNIVERSITY OF MICHIGAN

Such a system has been found to be very advantageous for anodic film formations of the order of 600 volts and higher for the reason that electrolytes having sufficiently high scintillation values do not efficiently produce initial anodic film formations.

In the multiple system it is therefore customary to form anodic films in the first tank to some intermediate voltage value, in an electrolyte of comparatively high ion concentration, and then form a higher voltage film in a second tank, using a second electrolyte of a much lower ion concentration.

Using such a multiple system, it has been found possible to form anodic films at potentials as high as 800 volts or even higher.

The following block diagram illustrates such a multiple continuous formation system:

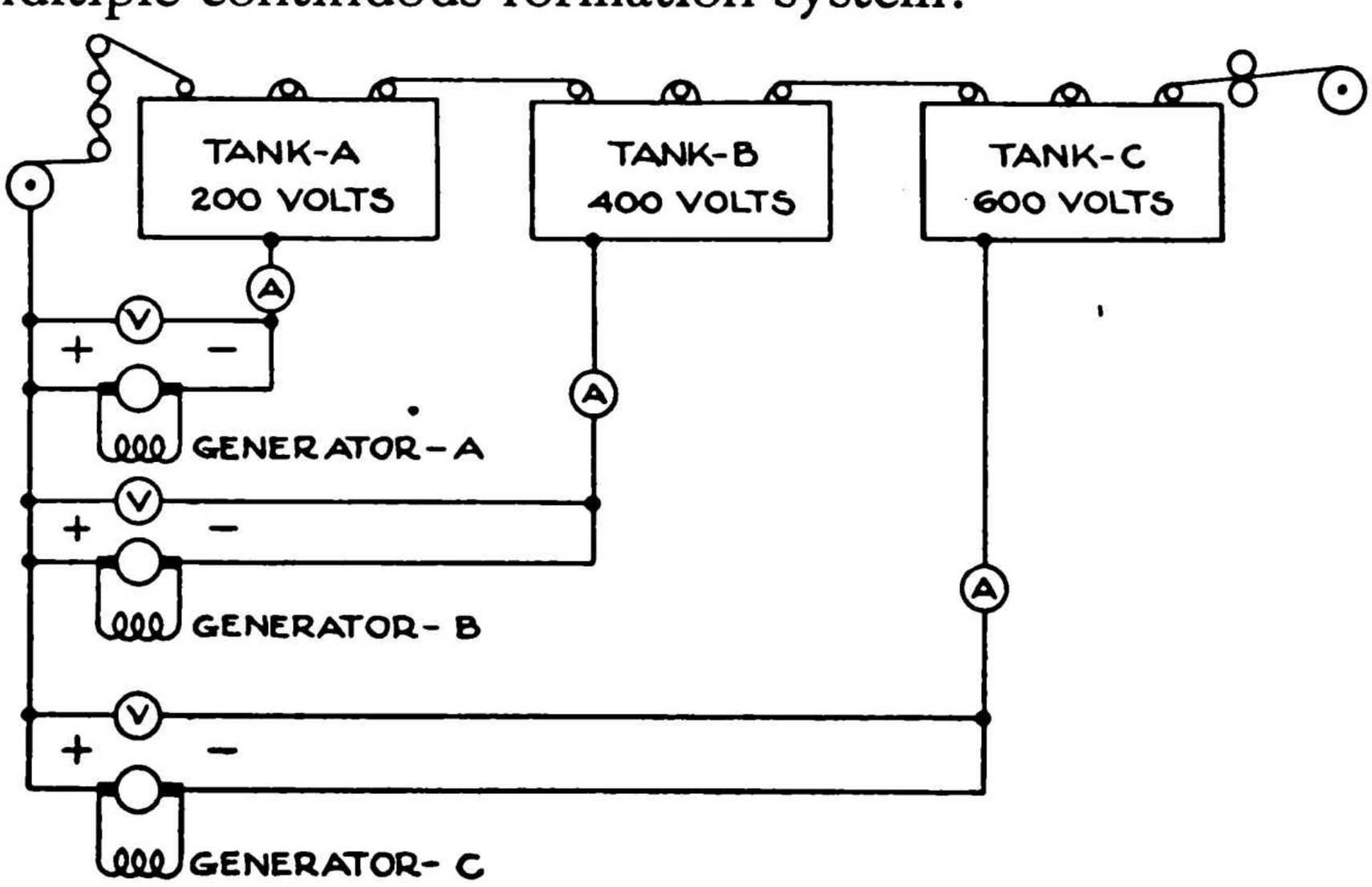

This illustration shows a triple formation arrangement of tanks for the formation of anodic films at 600 volts. As it is noted that the anode foil is the common

Digitized by Google Original from UNIVERSITY OF MICHIGAN

positive terminal of all three direct current generators it follows that the respective negative terminals must be isolated from each other. For this reason each tank, with its electrolyte content, must be electrically insulated from every other tank.

In this illustration it is also noted that voltage is applied in progressively increased steps, to each tank in the system.

This system of multiple step formation is not always utilized merely to form anodic films at the higher voltages but sometimes to economize on or take advantage of the use of smaller current generating units.

Other advantages to the use of the continuous method of anodic film formation are found in the fact that current generating equipment can be operated at constant and often full load thus realizing the maximum over-all efficiency.

In the continuous formation system, the total current drain will be found to be a function of the applied voltage, type and concentration of electrolyte, speed of anode foil travel, total anode foil surface immersed in the electrolyte and temperature of the electrolyte.

The lower voltage formations in sulphuric and oxalic acid electrolytes may be applied to the continuous formation method but at the present stage of the art these electrolytes are rarely used.

Of all the possible electrolytes which might be used for anodic film formations only two have proved to be entirely satisfactory and these two are aqueous solutions of boric acid and either ammonium or sodium borate. Of these two the sodium borate type is the more satisfactory.

Digitized by Google Original from UNIVERSITY OF MICHIGAN

A general idea of the concentrations of boric acid and sodium borate required for electrolytes, to be used in the continuous formation of anodic films, can be gained from the following tabulation:

Water	*Boric Acid*	*Sodium Borate*	*Formation Voltage*
100 c.c.	15 grams	None	600 to 800 volts
100 c.c.	10 grams	0.12 grams	525 to 600 volts
100 c.c.	10 grams	0.25 grams	450 to 525 volts
100 c.c.	10 grams	0.30 grams	350 to 450 volts
100 c.c.	10 grams	1.00 gram	150 to 350 volts
100 c.c.	10 grams	1.50 grams	50 to 150 volts
100 c.c.	10 grams	2.00 grams	10 to 50 volts

In the selection of the most suitable concentration of electrolyte for any particular formation voltage there are three basic factors to consider, these factors being: scintillation voltage, pH value and resistivity of the electrolyte.

In the formation of anodic films at the higher voltages, the selection of concentration is limited primarily by the scintillating voltage of the electrolyte. For lower values of formation voltage, however, the selection is not so limited but it must be pointed out that the higher the pH value of the electrolyte the greater will be the tendency to form the less active type of aluminum oxide film. This would naturally indicate the use of the higher voltage electrolytes for the lower voltages of anodic film formation. On the other hand, the electrolytes of lower pH values and smaller concentrations of sodium borate, possess relatively high specific resistivities; consequently they may present serious difficulties in the form of excessive potential drops in the electrolyte. For these reasons it is

Digitized by Google Original from UNIVERSITY OF MICHIGAN

frequently necessary to make a judicious balance between these various factors, in the selection of a particular electrolyte, for a specific voltage of formation.

This phase of the problem is considerably aggravated in the case of etched anode foil where it is necessary to take excessive precautionary measures to obtain the most active type of aluminum oxide film.

The plain aluminum foil surface is somewhat protected by its natural oxide coating so there is a reduced tendency towards the formation of an inactive film or layer of aluminum hydroxide. The etched surface does not always have this protection and the tendency towards the formation of an inactive outer layer of aluminum hydroxide is very marked.

To illustrate this point, reference is made to the following assumed cross-sectional view of etched foil.

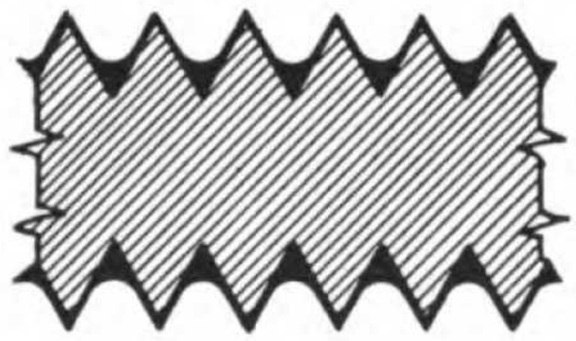

Assuming for the sake of illustration that the etch has a sort of saw toothed pattern, the dark areas serve to illustrate the coating of aluminum hydroxide which partially fills the bottom portions of the craters or apertures of the etch. Such a condition tends to be produced when the pH value of the formation electrolyte is higher than a certain range.

The presence of such coatings or layers of the inactive film of aluminum hydrate obviously causes a material increase in contact resistance between the active dielectric film and the electrolyte, in a completed

Digitized by Google Original from UNIVERSITY OF MICHIGAN

dry electrolytic capacitor structure, with the result that effective capacities are reduced and equivalent series resistance values increased.

Relationship Between Anode Foil Surface Area and Capacity

The relationship between effective anode surface area and capacity which exists in wet electrolytic capacitor structures does not hold true for dry electrolytic capacitors.

For a given capacity at a given voltage, the dry electrolytic capacitor generally requires an anode surface area some fifteen per cent greater than that required for a wet electrolytic capacitor of the same capacity and voltage ratings. This is a difference inherent in the two structures.

In determining the anode foil area required, for a given capacity at a given voltage of formation, the following formula applies to plain foil and gives a fairly accurate determination:

$$A = E \times C \times .015$$

Where A=area of one side of foil in square inches
E=Formation potential in volts
C=Capacity in microfarads.

The relationship between capacity, anode foil area and formation voltage, is fairly uniform over the entire useful voltage range where plain anode foil is used. With the use of etched foil, however, this relationship is subject to a number of variables of considerable magnitude.

Digitized by Google Original from UNIVERSITY OF MICHIGAN

With any given procedure of etching, the ratio of increase in physical surface area may be fairly constant but the ratio of gain in capacity is by no means proportional or constant.

At the instant of the beginning of the formation of the anodic film, a certain amount of the aluminum surface must dissolve and go into solution in the electrolyte. This quantity of aluminum is of a minimum value with plain foil but even assuming that not to be the case the total surface area of plain foil would not be reduced by such dissolution.

With etched surface foil the case is entirely different because this dissolution may cause some of the peaks to be removed altogether. In addition an increasing amount of aluminum may be lost from the peaks by the actual combination of the aluminum with oxygen to form the aluminum oxide film. As these peaks or projections are very small, it is readily seen that some reduction in the original physical surface area will occur during formation of the anodic film.

As both dielectric film thickness and amount of aluminum dissolved from the surface, are a function of the magnitude of the forming potential it can also be seen that the reduction in anode surface area becomes a function of the formation voltage.

Reference is made to the two following cross-sectional illustrations to more clearly point out this characteristic of etched surface foil.

Here again, for sake of illustration, a saw toothed etch pattern is assumed but the rounding off of the peaks has resulted in a material decrease in the foil surface area.

Digitized by Google Original from UNIVERSITY OF MICHIGAN

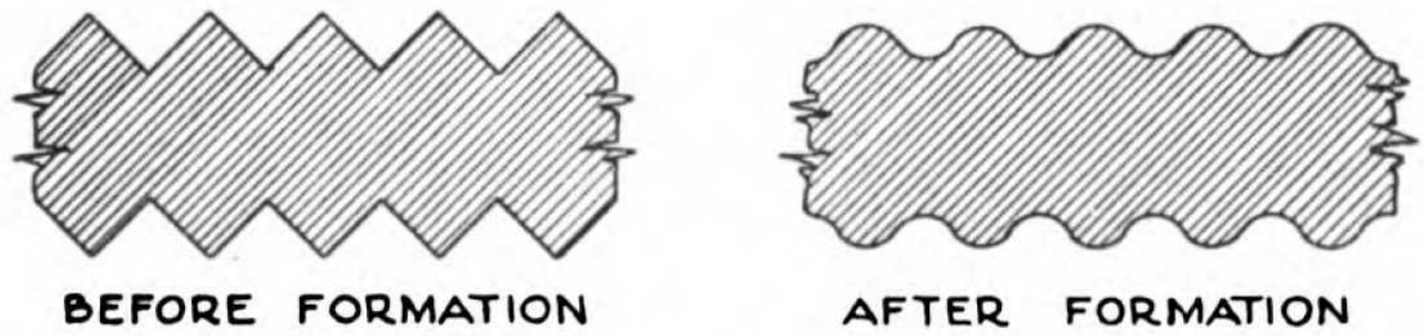

Actual observed measurements have shown that the effective gain in anode surface area may vary from ten times that of plain foil to five times when the same etched surface is anodically formed at 10 and 500 volts respectively.

Under the circumstances it would be extremely difficult to set up any formula for calculating required anode areas of etched surface foil, even though such a calculation was based on a certain type of etching system.

The following graph will, however, serve to indicate the average values of foil areas required per microfarad at various values of formation potential:

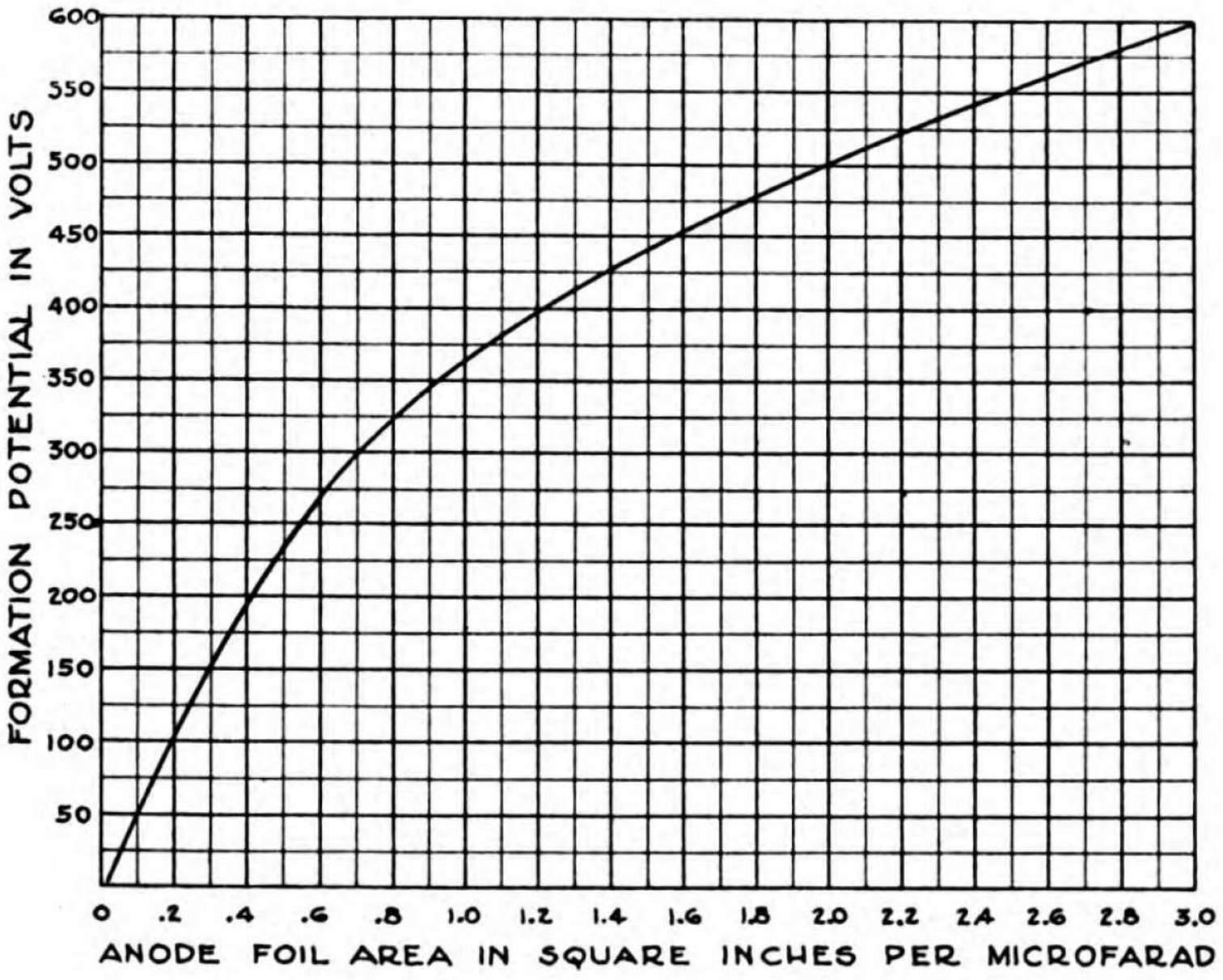

Digitized by Google Original from UNIVERSITY OF MICHIGAN

Both plain and etched surface anode foils are formed by the same continuous formation procedures but it is customary to adjust the speed of travel of the etched foil through the formation tanks in more or less direct ratio to the increase in surface area obtained in the etching operation. This is obviously necessary to maintain the same formation voltage gradient with etched anode foil as is obtained with plain foil.

Also, in actual practice, it is found that it is necessary to form anodic films at slightly higher voltages than those values at which the completed electrolytic capacitor is rated. These higher voltage values are subject to considerable variation, depending on desired characteristics, type of electrolyte employed and potential drops in the formation system.

In general, it is common practice to form anodic films, for use in dry electrolytic capacitors, at voltages in excess of the rated operating voltages to the extent indicated by the following graphic illustration:

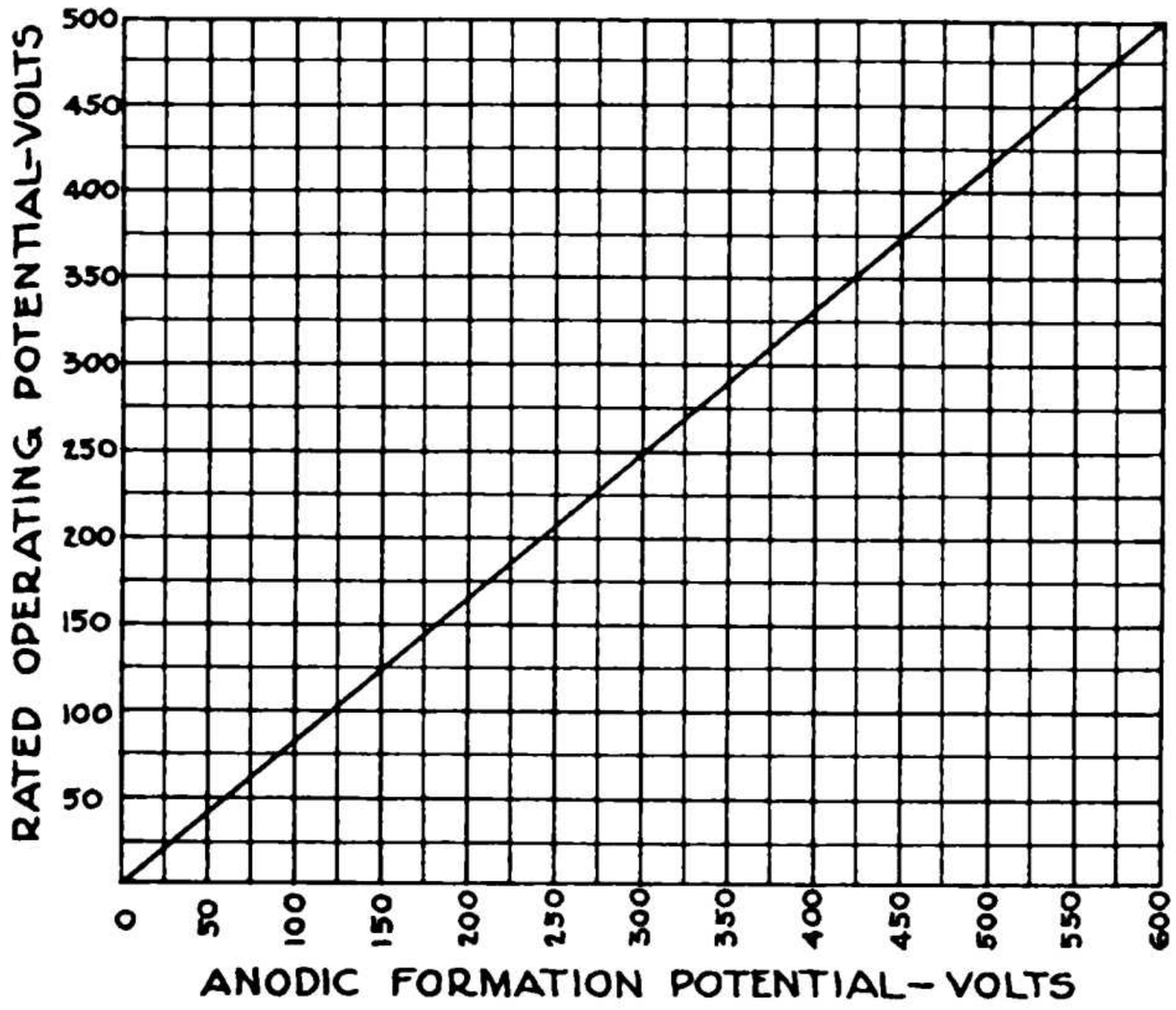

Digitized by Google Original from UNIVERSITY OF MICHIGAN

Chapter X

NON-AQUEOUS ELECTROLYTES AND THEIR CHARACTERISTICS

THE non-aqueous electrolytes, employed in dry electrolytic capacitor structures, are so termed because the percentage of allowable water present is relatively small.

As a general rule, the non-aqueous electrolytes consist of a weak acid, a salt of a weak acid and a solvent. The solvent is generally one of the polyhydroxyl alcohol group such as a glycerol or glycol although in some cases it may be replaced with the use of a hydroxy alkylamine. The salt of the weak acid is generally a salt of the weak acid employed although this is not necessarily always true.

In some cases the electrolyte may not employ a solvent but may consist of two salts only, in its composition.

In most cases, the electrolyte is contained in a saturated separator medium but under certain circumstances the separator medium is replaced altogether, by the use of an electrolyte of such physical characteristics necessary to make such a replacement.

Non-aqueous electrolytes may also contain inert filler materials, for the purpose of increasing viscosity, such as bentonite, diatomaceous earth, silica gel, aluminum oxide, agar-agar, gum tragacanth and starch. In some instances, inert substances are added to the electrolyte for the purpose of increasing electrical conduc-

Digitized by Google Original from UNIVERSITY OF MICHIGAN

tivity. Such substances may be magnetite, graphite, colloidal graphite, carbon, colloidal silver or powdered metals such as aluminum and copper.

Physically, the non-aqueous electrolytes may, and do, range from slightly viscous fluids to semi-hard or fudge-like states.

As the stability of the dielectric film, both as to useful life and electrical breakdown, is determined to a large extent by the ion concentration of the electrolyte, a very narrow range of operational limits is more or less automatically established for both pH value and conductivity of any specific electrolyte composition. Water being the main ionizing medium, it becomes imperative that the water content of any electrolyte composition be held within specifically determined bounds for any particular electrolyte and electrolyte application.

The electrical characteristics of any dry electrolytic capacitor structure are, in the main, determined by the type of non-aqueous electrolyte employed. It is for that reason that considerable space will be devoted to a general description of various electrolyte compositions which have, by experimental determinations, been found to produce satisfactory results.

Organic Acid Types of Electrolytes

Straight organic acids of the water soluble types or organic acids associated with a salt may be employed. For example, acetic acid alone or in combination with such salts as ammonium acid borate, sodium borate, sodium potassium tartarate, ammonium phos-

Digitized by Google Original from UNIVERSITY OF MICHIGAN

phate, sodium acetate or ammonium acetate, is frequently employed.

In place of acetic acid, other liquid mono-carboxylic organic acids, capable of being associated with water, may be used.

These acids may be of the aliphatic series or the aromatic or cyclic type.

Illustrative of the aliphatic acids which may be employed are: Propionic acid, acrylic acid and butyric acid. Derivatives of the mono-carboxylic acids may also be employed, these being represented by such compounds as the following: lactic acid, hydroxy-acrylic acid, crotonic acid, ethylene lactic acid, dihydroxy propionic acid, isobutyric acid, diethyl acetic acid, iso-amyl acetic acid and iso-butyl acetic acid.

Creyulic acid (cresol) and carbolic acid (phenol) are examples of suitable aromatic type acids.

Inorganic acids are also employed, in combination with organic acids of either or both the aliphatic and aromatic types.

The following tabulated list will serve to illustrate various electrolyte compositions which have either been commercially employed or have shown satisfactory experimental results:

Formula No. 1.
Glacial Acetic Acid
Water content 10 per cent maximum by weight.

Formula No. 2.
100 grams boric acid
175 grams glacial acetic acid
Ammonia gas (NH_3) passed through mixture to pH value of from 6.5 to 7.

Digitized by Google Original from UNIVERSITY OF MICHIGAN

Formula No. 3.
Glacial Acetic Acid
Ammonium borate
One gram molecule of commercial borate added to 3.6 gram molecules of the acid.

Formula No. 4.
100 grams boric acid
90 grams glacial acetic acid
90 grams lactic acid
Ammonia gas (NH_3) passed through mixture to pH value of from 6.5 to 7.

Formula No. 5.
100 grams boric acid
90 grams lactic acid
90 grams propionic acid
Ammonia gas (NH_3) passed through mixture to pH value of from 6.5 to 7.

Formula No. 6.
100 grams boric acid
90 grams butyric acid
90 grams lactic acid
Ammonia gas (NH_3) passed through mixture to pH value of from 6.5 to 7.

Formula No. 7.
100 grams boric acid
90 grams phenol
90 grams lactic acid
Ammonia gas (NH_3) passed through mixture to pH value of from 6.5 to 7.

Formula No. 8.
100 grams boric acid
90 grams phenol
90 grams glacial acetic acid
Ammonia gas (NH_3) passed through mixture to pH value of from 6.5 to 7.

Digitized by Google Original from UNIVERSITY OF MICHIGAN

As the specific resistivity of most of the acids mentioned is relatively high, ammonium borate or other ammonium salts are formed to effectively act as resistance reducing agents. The alkali reagents employed are not limited to ammonia but experimental determinations have shown ammonia to be the most desirable for reasons which will be mentioned in later paragraphs. Ammonium hydroxide may be used to replace ammonia gas. Its substitution would entail the additional procedure of water content adjustment of the prepared electrolyte.

Of the mentioned formulae, formula number two has been found most satisfactory in actual practice.

In the application of these electrolytes to dry electrolytic capacitor structures, the separator medium is saturated at electrolyte temperatures best suited for satisfactory impregnation results and temperatures range from 75° to 110° Centigrade. Temperatures above 110° Centigrade cannot normally be employed or excess reduction in desirable water content will result. Also in the application or use of these types of electrolytes specific resistivities and pH values as well as final water contents must be adjusted to conform to the characteristics desired in the completed dry electrolytic capacitors.

Substantially the same types of electrolytes are frequently compounded by the mixing together of two or more salts, each of which is substantially dry in its normal separate state. Such salts are usually blended together at elevated temperatures not as a rule exceeding 115° Centigrade. A characteristic of such a mixture of salts, normally solids at room temperature, is

Digitized by Google Original from UNIVERSITY OF MICHIGAN

that when blended together at elevated temperatures, they prevent recrystallization of one another upon cooling. Upon cooling to room temperature and depending on the salts employed, the mixture will vary in physical state from that of a viscous liquid to a plastic or semi-solid mass.

Illustrative of such electrolytes are the following formulae:

Formula No. 9.
100 grams ammonium acetate
33 grams disodium hydrogen phosphate.

Formula No. 10.
100 grams ammonium acetate
25 grams ammonium citrate.

Formula No. 11.
100 grams ammonium acetate
100 grams aluminum acetate
100 grams trisodium phosphate.

Formula No. 12.
100 grams ammonium acetate
43 grams calcium lactate.

Formula No. 13.
100 grams ammonium acetate
25 grams ammonium oxalate.

Formula No. 14.
100 grams ammonium acetate
33 grams sodium perborate.

There are many other combinations which would produce substantially the same results but space would not permit their complete listing.

Still another electrolyte which employs no solvent in its composition is a type which employs also only a

Digitized by Google Original from UNIVERSITY OF MICHIGAN

single salt. Illustrative of this single salt type are the following formulae:

Formula No. 15.
100 grams lactic acid
70 c.c. ammonium hydroxide (28%).

Formula No. 16.
100 grams lactic acid
80 c.c. sodium hydroxide (37%).

This type of electrolyte is characterized by the unusual circumstance of producing satisfactory results in dry electrolytic capacitors despite the fact that the specific resistivity of the electrolyte, at room temperature, may be very high. The water content is normally extremely low and to obtain this low water content the equivalent boiling point of the electrolyte generally ranges from 150° to 190° Centigrade. With this type of electrolyte, specific resistivities frequently are above values of 1×10^{5} ohms per centimeter cubed. Such a value of resistivity is approximately 300 times greater than normally found most desirable in other types of electrolytes.

Solvent Types of Electrolytes

Electrolytes may be compounded from the hydroxy-alkylamines, such as monoethanolamine, in combination with a weak acid of either the organic type, inorganic type or both.

The hydroxy-alkylamine employed may be one of the following forms:

Monoethanolamine

$$\begin{matrix} H \\ H \end{matrix}\!\!\rangle N—CH_2CH_2OH$$

Digitized by Google Original from UNIVERSITY OF MICHIGAN

or Diethanolamine

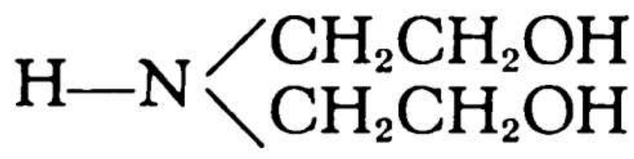

or Triethanolamine

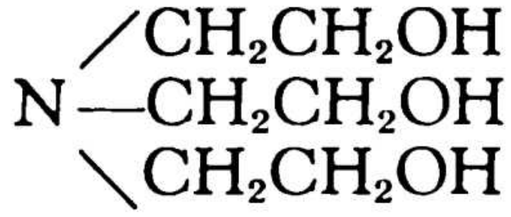

A mixture of two or more of the above forms may also be employed.

In this type of electrolyte, although the amines are above designated by the trivalent nitrogen, it is found that they are analogous to ammonia as a gas (NH_3) and in solution as ammonium hydroxide (NH_4OH).

Thus, if a triethanolamine is combined with an acid, such as boric acid, a triethanolamine salt will result or if combined with a fatty acid such as oleic acid a triethanolamine soap will result. It is obvious that the mono and diethanolamines react in the same manner to produce end products of the same character.

The specific characteristics of an electrolyte of this type, such as pH value and conductivity, are largely determined by the character of the acid component of the salt formed. Acids which have been found satisfactory are boric acid, malic acid, citric acid, acetic acid, lactic acid and tartaric acid. The hydroxl-alkylamine salts formed in combination with these acids as well as with the fatty acids such as oleic, are gels in structure. This fact lends this type of electrolyte to advantageous physical structures for use in dry electrolytic capacitors.

Digitized by Google Original from UNIVERSITY OF MICHIGAN

In general, this type of electrolyte is prepared by first combining approximately equal molecular weights of mono, di or tri ethanolamine or a mixture of two or more of these and a fatty acid to produce a resultant soap like structure. To this is added enough boric acid to reduce the pH value to some point below 7. Water content and pH value are adjusted to conform to desired characteristics of the electrolytic capacitors in which the electrolyte is to be used.

Illustrative of electrolytes of this type are the following formulae:

Formula No. 17.
100 grams boric acid
65 grams triethanolamine.

Formula No. 18.
100 grams boric acid
55 grams triethanolamine
25 grams sucrose.

Formula No. 19.
100 grams boric acid
25 grams monoethanolamine
30 grams oleic acid.

Formula No. 20.
100 grams malic acid
350 grams triethanolamine
200 grams stearic acid.

Formula No. 21.
100 grams boric acid
100 grams diethanolamine.

Formula No. 22.
100 grams tartaric acid
125 grams monoethanolamine
150 grams palmitic acid.

Digitized by Google Original from UNIVERSITY OF MICHIGAN

The electrolytes so far described are not generally employed in the fabrication of dry electrolytic capacitors, primarily, because more consistently satisfactory results are obtained with the type which will now be described.

This type of electrolyte consists of a mixture of a polyhydroxy alcohol such as glycerol or ethylene glycol, boric acid and an alkali salt of boric acid such as sodium or ammonium borate.

Some six years ago, glycerol was in more common use than ethylene glycol but since that time the latter has almost entirely replaced the use of the former. Also, the use of sodium borate as the alkali salt ingredient has been discontinued in general use.

With these changes, the electrolyte in almost universal use, in dry electrolytic capacitors, has evolved into a mixture of ethylene glycol, boric acid and ammonium borate.

Because of the almost universal use of this electrolyte, detailed data will be presented to show the relationship between electrolyte composition and characteristics of dry electrolytic capacitors incorporating the electrolytes in question.

In preference to the use of ammonium borate as a salt, ammonium hydroxide will be indicated in most cases.

The choice of an electrolyte for use in any type of dry electrolytic capacitor structure is not only a matter of compromise but is, in general, determined by factors such as, operating and breakdown voltages of the capacitor, permissible equivalent series resistance and

Digitized by Google Original from UNIVERSITY OF MICHIGAN

leakage current values and stability of behavior with time and conditions. The physical state of the electrolyte may also be important, depending upon the type of container used to house the capacitor, in its finished state. The physical state of the electrolyte both at room and elevated temperatures may also be important in consideration of the type and corresponding absorbency of the separator material used in the capacitor structure. Meaning, of course, that electrolytes, at impregnation or saturation temperatures, may be required to be in a highly liquid state to ensure thorough penetration into separator materials. Meaning, also, that electrolytes may or may not be required to be semi-solids at room or normal operating temperatures, as circumstances dictate.

If boric acid is added to ethylene glycol, a chemical reaction will take place, even at room temperature. An increase in temperature will increase the rate of reaction. The result of this reaction is the formation of a glyco-borate and water. The end products of such a reaction may also include an excess of either boric acid or ethylene glycol depending on quantitative values of the original mixture.

The electrical conductivity of such a mixture will vary in proportion to the water present, as one of the end products.

If heat is applied to such a mixture, part of the water of reaction will be lost, resulting in an increase in the boiling temperature. Thus boiling point temperature and electrical conductivity becomes a measure of water content.

Digitized by Google Original from UNIVERSITY OF MICHIGAN

If the temperature of such a mixture is raised to the boiling point and boiling is continued, all the water may be driven off, with the formation of a glass hard polymerization product or resin. With the formation of the resin the boiling point will have increased to a very elevated temperature and the electrical conductivity will be reduced to substantially zero.

If ethylene glycol, boric acid and ammonium hydroxide are mixed together a similar chemical reaction takes place and the end products formed are water plus a complex compound thought to be an ammonium-glyco-borate. The exact structure of this compound has not been definitely determined but considerable knowledge has been gained, relative to its behavior as an electrolyte in dry electrolytic capacitor structures.

The addition of the ammonium hydroxide to the mixture to form a borate, materially increases the electrical conductivity. The specific resistivity of such a mixture is therefore determined by the amount of the borate formed and the water present. If this mixture is heated, water is again lost and if boiled to a sufficiently high temperature all water and ammonia will be finally driven off with the resultant formation of the glyco-borate resin. If boric acid is added to ethylene glycol in quantities not exceeding total solubility at room temperature, a liquid solution will result. If, however, an excess amount of boric acid is added, the balance will precipitate to form a turbid solution and if the excess is sufficient a semi-solid mass will result.

An increase in temperature will increase the total solubility. Thus, with a certain quantity of boric acid,

Digitized by Google Original from UNIVERSITY OF MICHIGAN

the mixture may be a clear liquid solution at elevated temperatures and a semi-hard or even hard solid at room temperatures.

If ammonium hydroxide is added to the mixture the total solubility is increased at elevated as well as room temperatures.

A loss of water, by the application of heat, results in a decrease in boric acid solubility and therefore elevates the temperature at which precipitation will begin, on cooling of the mixture to room temperature.

A loss of water also increases the viscosity of the mixture thus producing a highly viscous liquid when the total water loss is sufficient and provided no excess of boric acid is present to form a semi-solid instead.

From the foregoing data it can be seen that a mixture can readily be produced, which by proper quantitative selection of ingredients and adjustment of water content, will possess physical characteristics ranging from liquids to solids and electrical conductivities of varying values.

Of equal importance is the relative acidity or alkalinity of such electrolyte mixtures because of the necessity of maintaining the pH value within predetermined boundaries in order to maintain anodic film stability.

The following graphs will serve to illustrate these various factors.

From a study of the graph curves, a number of important observations may be made. Among these are: that for a given quantity of ethylene glycol and ammonium hydroxide, the specific resistivity of the electrolyte varies with the quantity of boric acid and

Digitized by Google Original from UNIVERSITY OF MICHIGAN

furthermore the effect of this variation is more pronounced at temperatures near room temperatures than at more elevated values of temperature. It is also quite

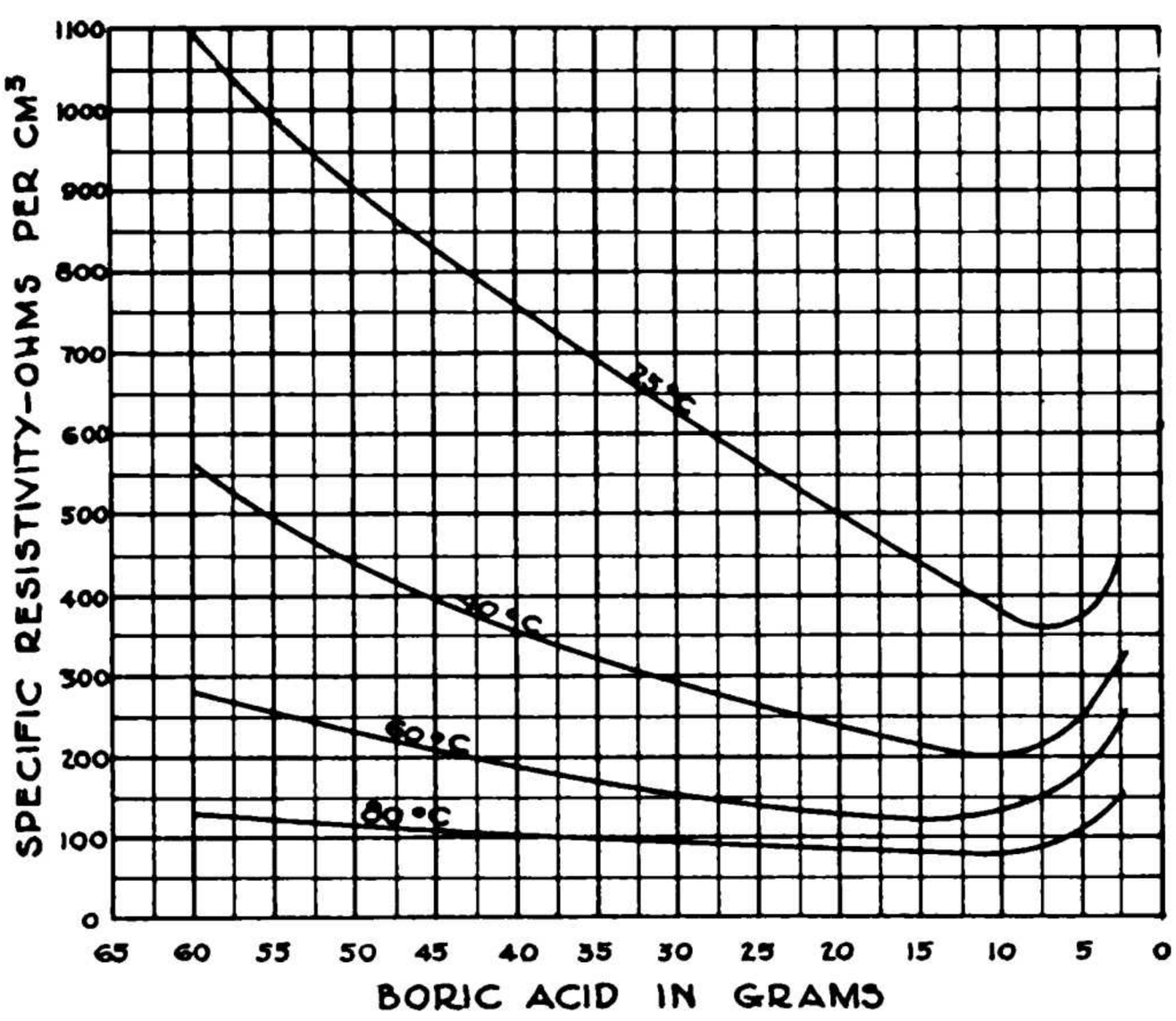

Formula No. 23.

60 grams ethylene glycol
20 c.c. ammonium hydroxide (28%)
Variable quantity boric acid
Boiling point 120° Centigrade.

evident that the lower the boric acid content, in this case, the lower the specific resistivity and obviously the more liquid the physical state of the electrolyte as well.

The curves on page 133 indicate an important fact: that is that for a given quantity of ethylene glycol and boric acid there is an optimum value of ammonium hydroxide which results in the highest electrical conductivity.

Digitized by Google Original from UNIVERSITY OF MICHIGAN

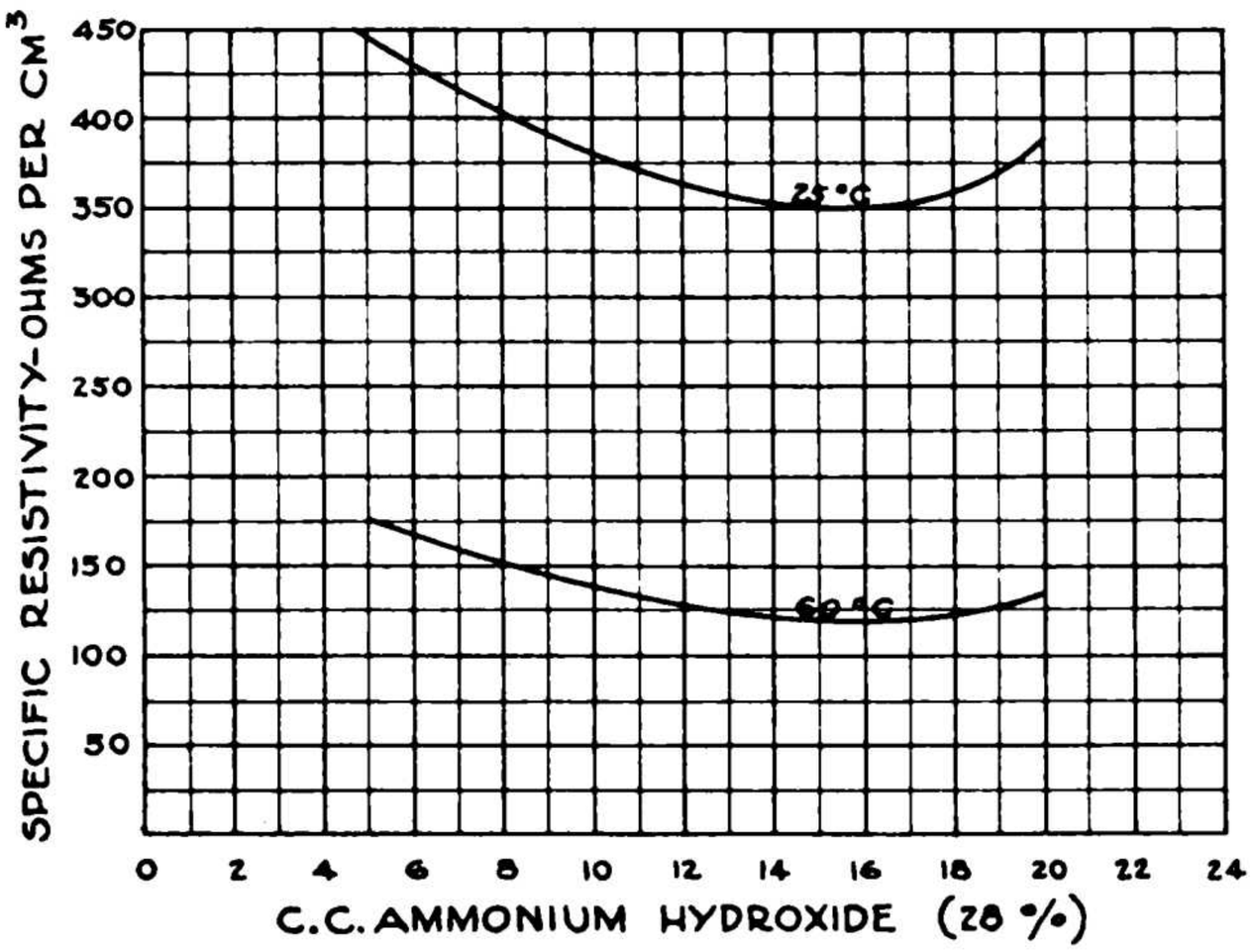

Formula No. 24.

60 grams ethylene glycol
10 grams boric acid
Variable quantity ammonium hydroxide (28%)
Boiling point 120° Centigrade.

As has been mentioned in previous paragraphs, the continued elevation of electrolyte temperature results in continued loss of water with resultant increase in boiling point of the mixture and corresponding increase in resistivity.

A typical illustrative example of this relationship is shown by the graph on page 134.

It must be noted that the increase in resistivity with boiling point temperature is not only caused by a reduction in the water content but in an appreciable loss of ammonia as well which in turn causes a proportional change in pH value. Illustrative of this change

Digitized by Google Original from UNIVERSITY OF MICHIGAN

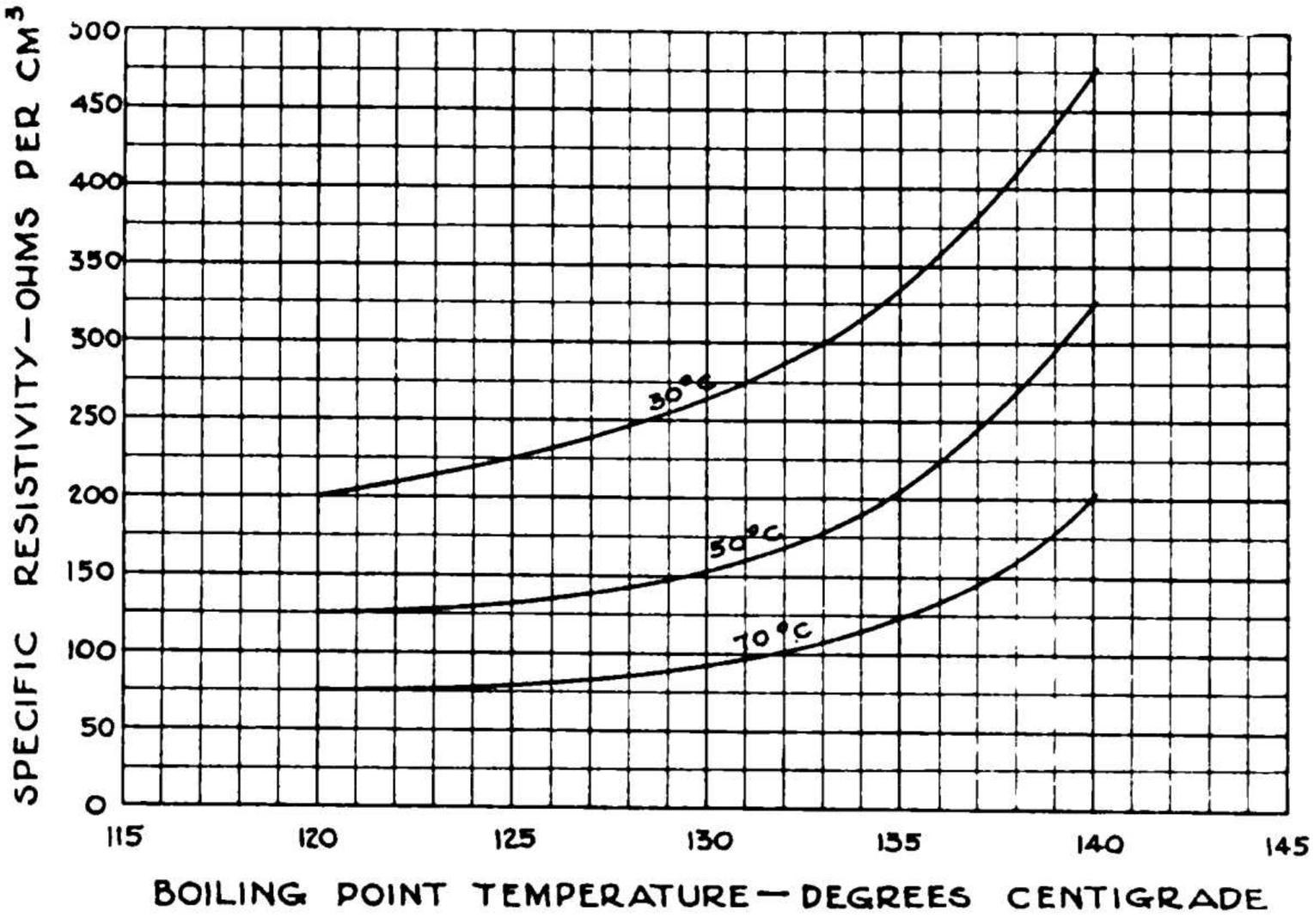

Formula No. 25.
60 grams ethylene glycol
10 grams boric acid
15 c.c. ammonium hydroxide (28%)
Variable boiling point.

in relative acidity or alkalinity with elevation in boiling point temperature is the graph on page 135.

It must be mentioned at this point that formulae numbers 23 to 25, inclusive, are not represented as being extremely suitable for use in dry electrolytic capacitor structures. They have merely been used for the purpose of showing the various relationships under examination. As a general rule the boric acid content of electrolytes actually employed ranges from 100 grams to 200 grams per 100 grams of ethylene glycol.

From the data thus far presented it can be seen that there are certain factors which determine the pH value and electrical conductivity of electrolytes of the ammonium-glyco-borate type.

Digitized by Google Original from UNIVERSITY OF MICHIGAN

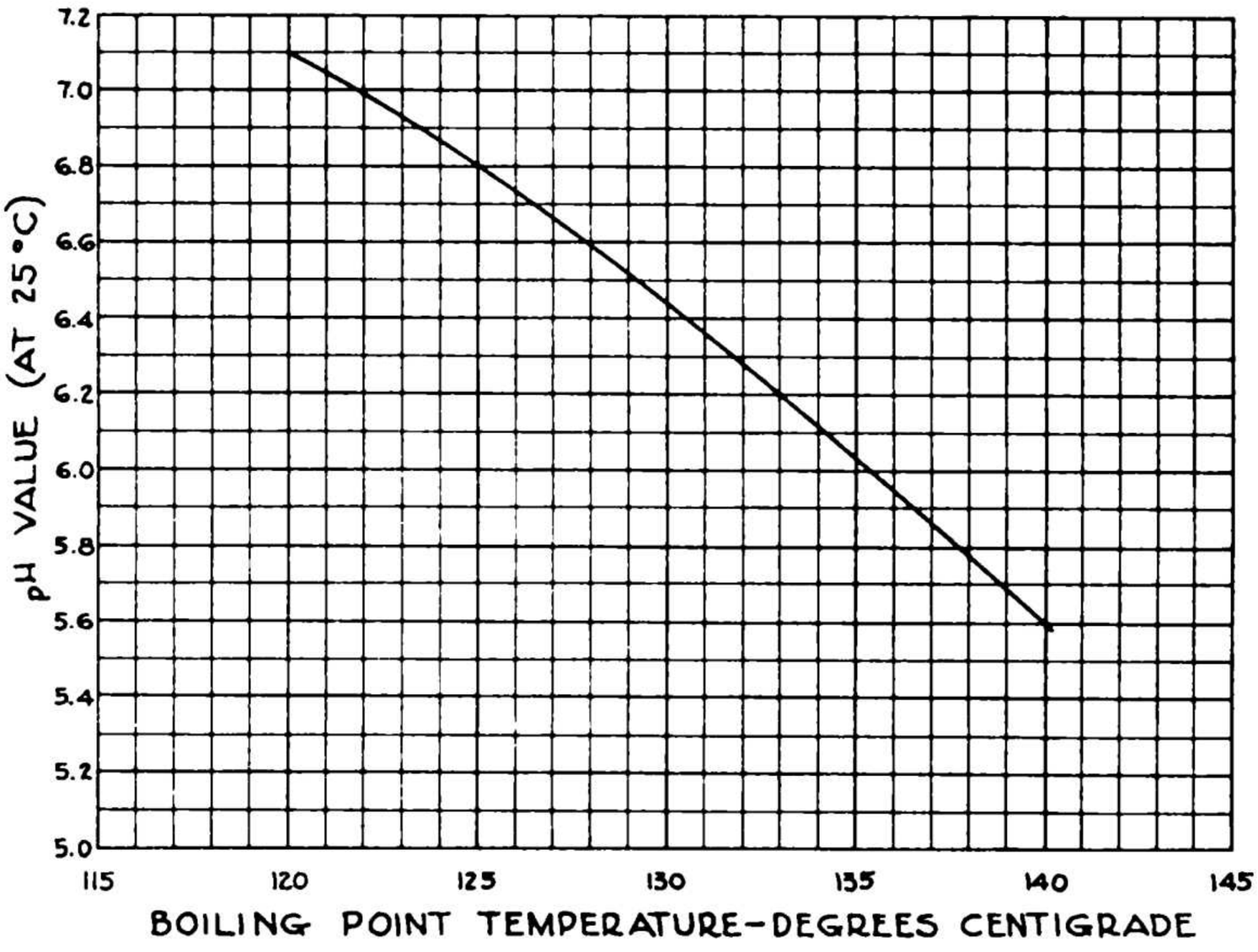

Formula No. 25.

In previous chapters it has been mentioned that the scintillating voltage or breakdown potential of an electrolytic capacitor is a log function of the specific resistivity and the temperature of the electrolyte and thickness of the dielectric oxide film. It must therefore hold that the breakdown voltage of a dry electrolytic capacitor is determined to a large extent by the pH value and water content of the electrolyte, which is in turn determined, to a considerable degree, by the boiling point temperature. That is, of course, provided that boiling point temperature variation is used to control the water content during the preparation of the electrolyte. To illustrate the relationship between water content or in other words electrical conductivity, and scintillating potentials at different electrolyte temperatures, the following graph is referred to:

Digitized by Google Original from UNIVERSITY OF MICHIGAN

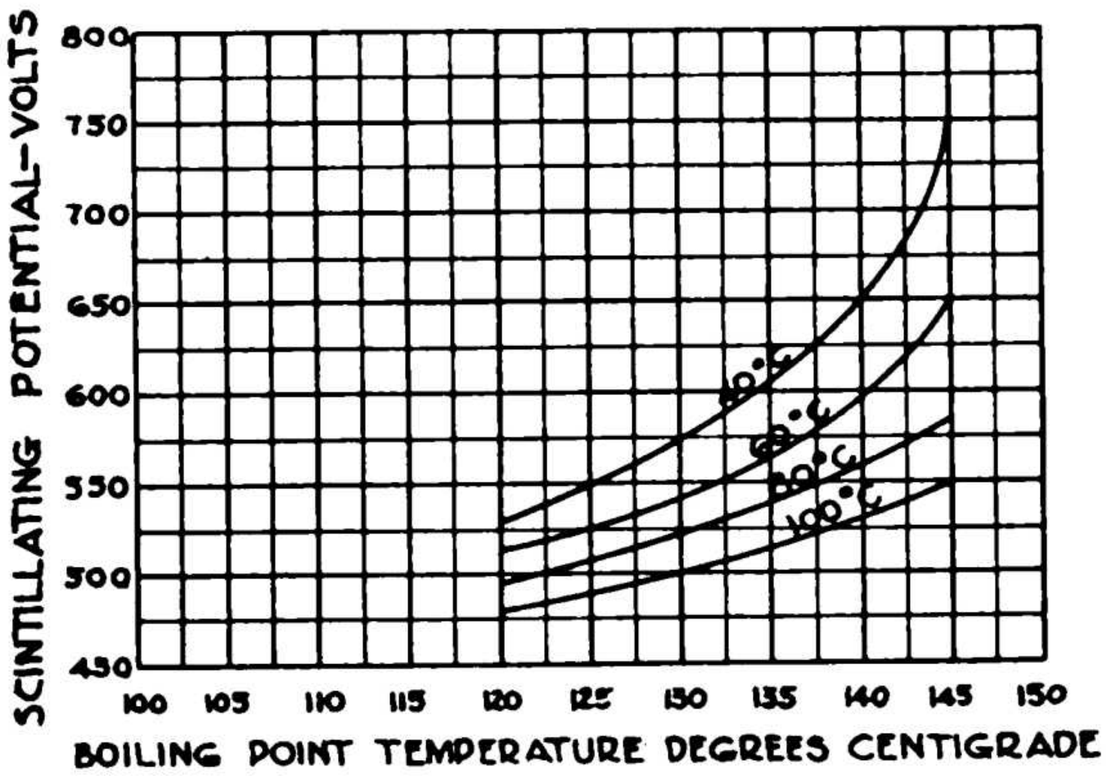

Formula No. 26.

100 grams ethlyene glycol
140 grams boric acid
20 c.c. ammonium hydroxide (28%)
Variable boiling point
600 volt dielectric film.

From this illustration it may be seen that the breakdown voltage of a dry electrolytic capacitor is materially lowered by an increase in temperature and this is obviously an important factor in determining the operating limitations of dry electrolytic capacitor structures.

Plastic and Resinous Type Electrolytes

Certain applications have been encountered for an electrolyte of such a physical structure that it may serve not only as the electrolyte but as the separator also. By this is meant that no absorbent separator material is used but that the electrolyte is of such a nature that it may be prepared in the form of thin rubber-like sheets.

Digitized by Google Original from UNIVERSITY OF MICHIGAN

Such electrolytes are generally compounded of a polyhydroxy alcohol, boric acid and an alkali salt of boric acid. The mixture is heated and boiled to a temperature where practically all water is removed and a polymerization product or resin is formed. Such a resinous compound has a relatively high resistivity. In fact, specific resistivities frequently reach values of 175,000 ohms per centimeter cubed and in order to render the compound sufficiently conductive, for use in dry electrolytic capacitors, inert substances such as carbon or graphite are added.

A typical electrolyte of this type is sometimes compounded in the following manner.

Formula No. 27.
Diethylene glycol 100 grams
Boric acid 46 grams
Sodium tetraborate 56 grams
Boiling point 180° Centigrade.

The plastic resin is placed into a kneading machine and approximately 50 grams of lamp black is kneaded into the mixture. The resultant plastic, rubber-like mass is then rolled into thin sheets for use in capacitor windings or it may be mixed with a solvent such as benzol or methyl alcohol in order to decrease the viscosity to a point where the mixture may be brushed or sprayed on the surfaces of the anode foil. In the latter case, the coated foils are heated in an oven to vaporize the solvent thus leaving the anode surfaces coated with the electrolyte in its rubber-like state.

Such an electrolyte cannot, however, be used in connection with anode foils which are filmed with the

Digitized by Google Original from UNIVERSITY OF MICHIGAN

thin active type of anodic film, otherwise the resulting capacitor would have no asymmetric characteristics. This would obviously be due to the fact that cold electronic emission would take place from the carbon or other conducting particles with which the electrolyte is loaded, where they contacted the active dielectric film. Under these conditions such a structure would be inoperative as a capacitor.

To overcome this drawback, the anode foil surface is first filmed or coated with a relatively thick film of aluminum hydrate by anodically forming it in an electrolyte such as: for example, sulphuric, oxalic or phosphoric acid. After this film has been formed, the thin active dielectric film is formed beneath the inactive film. The outer, inactive film now serves as a protective coating or barrier between the carbon particles of the electrolyte and the dielectric film proper. The resulting structure becomes operative as an electrolytic capacitor. A cross-sectional view of such an arrangement is shown below.

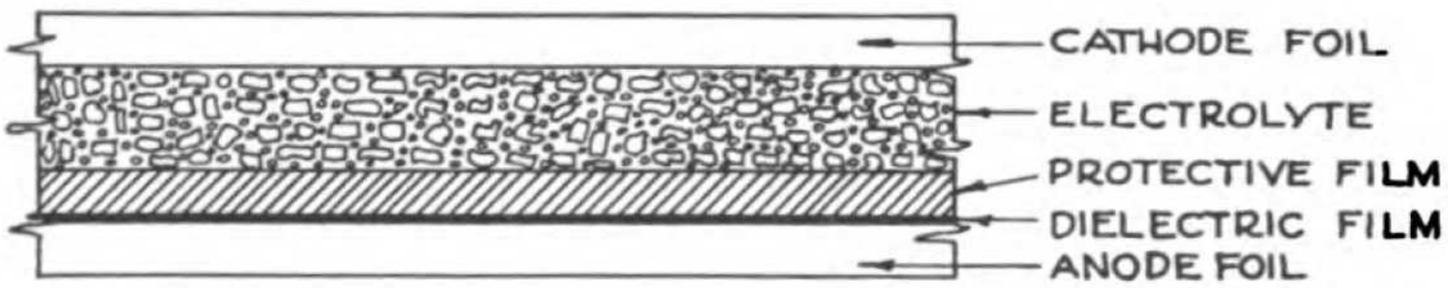

With this type electrolyte it may also be possible, under certain conditions, to eliminate the cathode coil entirely, making electrical contact to the electrolyte at only one point.

Another type of electrolyte which reaches an almost semi-resinous state, in its preparation, is one which

Digitized by Google Original from UNIVERSITY OF MICHIGAN

may be used with the more generally employed type of anodic film. This electrolyte is characterized by a relatively high specific resistivity which in turn is not fully reflected into the characteristics of the capacitor structures in which it may be utilized. Such an electrolyte may be compounded of the following ingredients.

Formula No. 28.

100 grams lactic acid
75 c.c. ammonium hydroxide (28%).

Formula No. 29.

100 grams lactic acid
80 c.c. sodium hydroxide (37%).

The boiling point temperature is usually carried to 190° to 200° Centigrade and specific resistivities range from 50,000 to 100,000 ohms per centimeter cubed.

Digitized by Google Original from UNIVERSITY OF MICHIGAN

Chapter XI

WINDING AND IMPREGNATION OF DRY ELECTROLYTIC CAPACITORS

Impregnation Methods

THE simplest method of impregnating or saturating the separator material with electrolyte consists of placing the dry capacitor windings into a vessel of hot electrolyte and allowing them to remain until the separator soaks up sufficient electrolyte. This was one of the first methods of impregnation employed in the fabrication of dry electrolytic capacitors. Such a procedure does however possess certain drawbacks. Separator materials must be highly absorbent and the electrolytes must have very low viscosities. Long, tightly wound capacitor sections may even then be difficult of complete penetration of the electrolyte to all parts of the winding. Electrolytes of the necessary low viscosity values are generally objectionable because of the tendency of subsequent leakage of electrolyte from the capacitor assemblies, even at room temperatures. Separator materials of sufficiently high absorbency generally lack the necessary physical strength for satisfactory mechanical handling and also frequently lower the desired breakdown potential of a given capacitor structure. In addition to these factors is the added water loss from the maintenance of the electrolyte, in a heated condition, during the time required for complete saturation of the separator material. Lack of definite control of boiling point temperatures results.

Digitized by Google Original from UNIVERSITY OF MICHIGAN

The soak impregnation method has been generally employed from time to time for want of a better method but considerable improvement in impregnation technique has occurred during the past five or six years.

One of the first improvements to be employed was the vacuum soak impregnation method. In this process, the capacitor windings are placed into a vessel of heated electrolyte, the vessel is closed and a vacuum pump reduces the pressure inside the vessel. Obviously the reduction in pressure inside the vessel reduces the surface tension of the electrolyte and results in a proportionate lowering of the boiling point temperature. This condition is met by adjusting the vacuum pressure and electrolyte temperature to a point below the boiling point of the electrolyte being used. As a general rule, the maximum vacuum pressure which can be employed is approximately 15 inches of mercury for the high voltage types of non-aqueous electrolytes. This is approximately equivalent to an internal pressure in the capacitor windings of some six or seven pounds which materially improves and accelerates the saturation of the separator medium.

The vacuum soak method, while an improvement, is limited also to the use of certain separator absorbencies and certain electrolyte viscosities as well as certain types of electrolytes.

The greatest improvement in impregnation technique is found in the centrifugal impregnation method. By the employment of centrifugal force the electrolyte may be forced into the capacitor windings with almost unlimited pressure without any lowering of the boiling point temperature of the electrolyte.

Digitized by Google Original from UNIVERSITY OF MICHIGAN

Another method of impregnating the separator material is the so-called hand pasting procedure. In this process the anode plate, the cathode plate and the separator materials are cut to size and the tabs formed or folded on the plates or foils. The cathode plate is placed on a flat surface, a separator is placed on top of the foil and electrolyte is pasted or smeared on and into the separator. This is done manually with a knife or scraper-like implement, much the same way that plaster would be applied to a surface. On top of the separator is then placed the anode foil or plate and in turn the other separator on top of the anode foil. This second separator is then manually pasted with electrolyte and the whole laminated section wound or folded into a concentric roll, the cathode foil forming the outside and last turn when finished. After winding or rolling, the section remains more or less round but is sometimes pressed flat in a press.

The rolling or winding operation is sometimes accomplished with the aid of a simple hand operated winding mandrel. In this case, one end of the completed pasted assembly is fastened to a spindle or mandrel, which is in turn rotated by a hand operated crank, and wound into a concentric roll which is then pulled off the mandrel.

This method has been extensively employed in past years but was generally limited to electrolytes of very high viscosities which, at room temperatures, become semi-hard masses. The type separator employed was limited to the gauze or cloth class because the paper or cellulose separator material does not possess sufficient mechanical strength to stand the scraping or abra-

Digitized by Google Original from UNIVERSITY OF MICHIGAN

sive treatment. The gauze separator used in this process was frequently starched stiff to prevent wrinkling during the pasting operation.

Another method, frequently employed, consists in passing anode and cathode foils, properly interleaved with separators, through vessels of hot electrolyte, to hand or power operated winding heads or rotating spindles. The foils and separators are supplied in rolls and pass continuously through the bath of electrolyte to the winding position where windings are made of a predetermined size for a desired capacity. The foils are then cut off and the completed winding removed. In this case, tabs are cut and folded on the foils after the winding has been completed and removed from the mandrel. All types of separators are used by this impregnation method although the cellulose separator is somewhat limited in handling since it must have sufficient mechanical strength, when saturated with electrolyte, to withstand the mechanical force necessary to pull it through the electrolyte bath. Electrolytes are also limited to certain viscosities because otherwise too heavy a coating of electrolyte might tend to accumulate at the winding position if the electrolyte solidified, on cooling, to too great an extent.

Other variations of this method are to pass only the cathode foil and the separators through the bath of electrolyte, allowing the anode foil to enter the winding position dry. This allows anode foils to be cut to predetermined sizes or lengths beforehand. And sometimes the separator material alone is passed through the electrolyte, saturated, then rewound into rolls. These rolls of saturated separator material are placed on a

Digitized by Google Original from UNIVERSITY OF MICHIGAN

winding machine and wound, with the cathode and anode foils, into capacitors.

The sketches below show diagrammatic illustrations of winding machines for dry and impregnating winding methods:

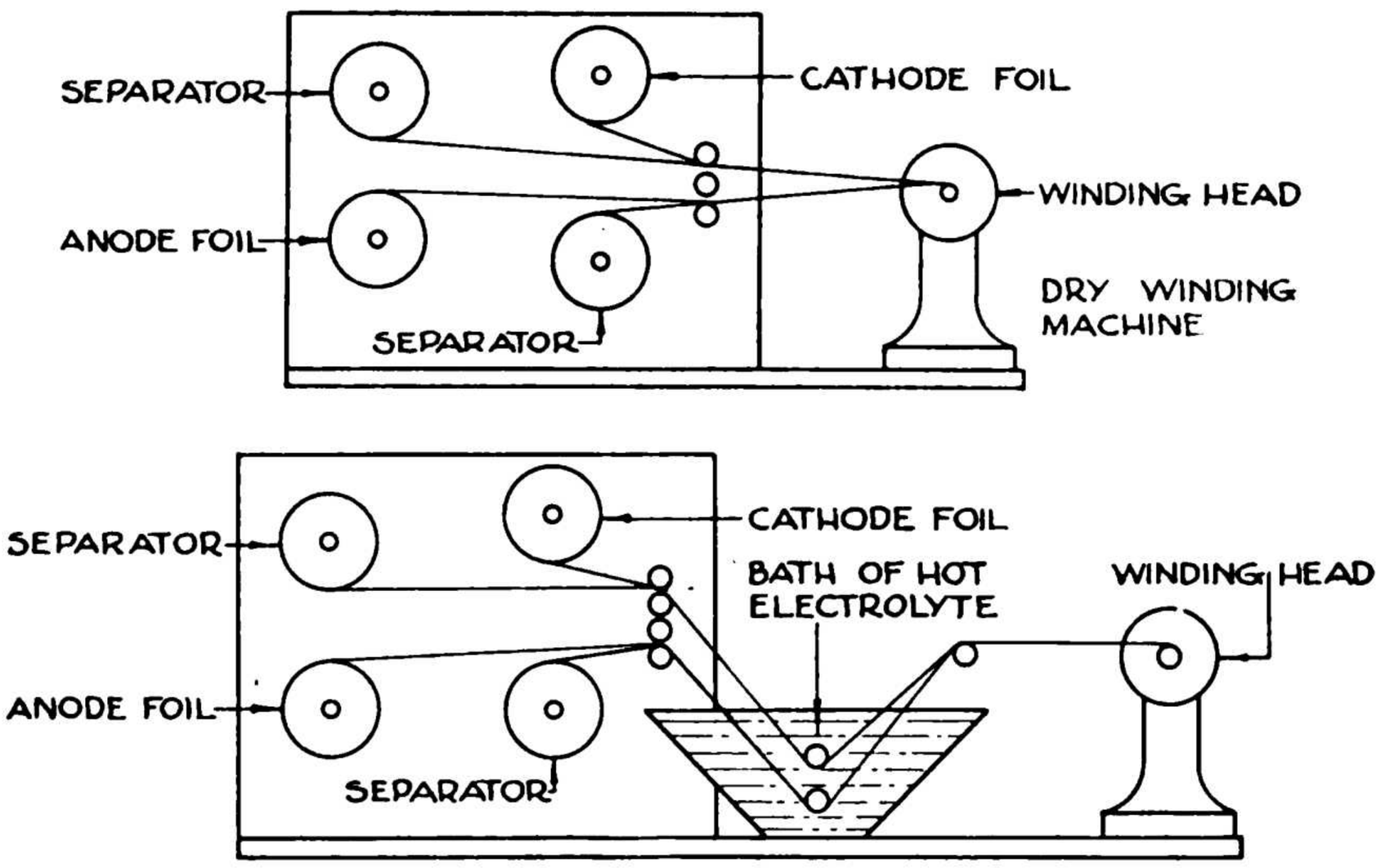

COMBINED WINDING AND IMPREGNATING MACHINE

Centrifugal or Hydrostatic Impregnation

The most satisfactory method of complete saturation of the separator medium in dry wound capacitor windings is accomplished with the use of centrifugal force. Due to this fact, a detailed description of the method is outlined in the following paragraphs.

In this method, the dry capacitor windings are placed in a bowl shaped vessel. This vessel is rotated at high speed and the electrolyte fed into it until the windings are completely immersed. After the bowl has spun or rotated a few minutes it is found that the

Digitized by Google Original from UNIVERSITY OF MICHIGAN

electrolyte has thoroughly penetrated and saturated the separator and winding. The explanation of this thorough saturation follows.

The method involves characteristics unique in that by it a pressure pattern is developed which is not uniform on all sides of a winding, as would be the case of the equalized force under a strictly static pressure. This pressure pattern varies from point to point. It is this unbalanced force, due to variation in pressure, that produces a high rate of penetration of electrolyte produced by a positive flow of solution straight through a winding in the direction of reduced pressure. The fluid pressure builds up with increased speed of rotation and increased diameter of the bowl. Thus, it becomes determinable and may be established, but in all cases is greatest toward the rim or outer wall of the revolving bowl, and decreases gradually toward the center. The pressure on the windings is the same on the top and bottom at corresponding points; likewise, the same on the right and left sides at corresponding points, but varies according to the above mentioned pressure gradient measured radially toward the center. This results in a tremendous hydrostatic "squeeze" from all sides, but much greater toward the axis than away from it. Thus, a peculiar directional pressure pattern develops, differing characteristically from any other method. The time required for complete impregnation of a capacitor winding will depend on the difference in pressures along a given distance, the penetrability of the separator medium, the tightness of winding, the specific gravity of the electrolyte and the viscosity of the electrolyte at impregnation temperatures.

Digitized by Google Original from UNIVERSITY OF MICHIGAN

The derivation of the centrifugal force which produces the referred to pressure patterns is given below:

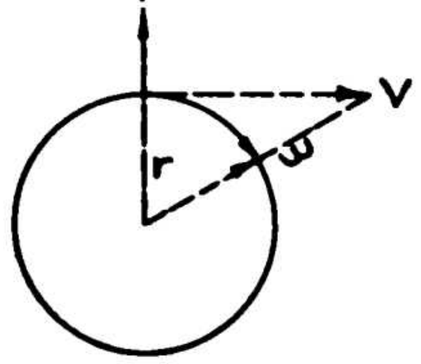

$$F = \frac{W}{g} r w^2$$

Where

F=Centrifugal force in grams
W=Weight of particle in grams
r=Radius of curvature of path in centimeters
w=Angular velocity in radians per second
g=acceleration of gravity (usually taken as 981 in centimeters per second per second).

Also

$$F = \frac{WV^2}{gr}$$

Where

V=Peripheral velocity in centimeters per second

Or

$$F = \frac{\pi^2}{900} \frac{W}{g} r \text{ (R.P.M.)}^2$$

$$F = 1.118\ Wr\ \text{(R.P.M)}^2\ 10^{-5}$$

Where angular velocity is expressed in revolutions per minute.

Where the electrolyte is being considered W can be taken as the specific gravity of the solution in grams per cubic centimeter.

It is important to note that the centrifugal force varies as the first power of the radial dimension but as the second power of the speed of rotation and as the product of the two.

Digitized by Google Original from UNIVERSITY OF MICHIGAN

It is readily seen that if a capacitor winding is rotated, in a bowl-like vessel, while submerged in an electrolyte, the pressure pattern which results in penetration of the electrolyte, is a function of the length of the winding and the other factors mentioned. A cross sectional, diagrammatic illustration of the position of the winding in a centrifuge follows:

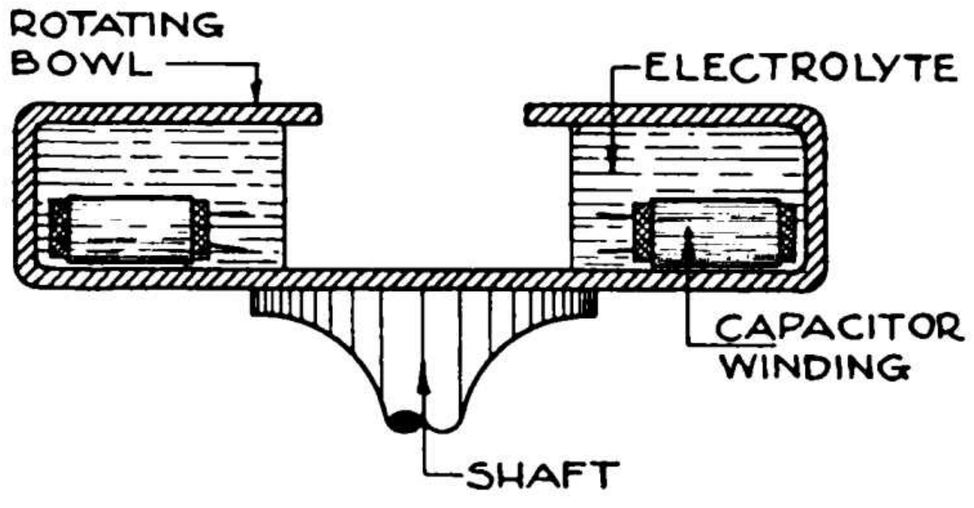

The electrolyte is illustrated as being in the position taken at the time the bowl is rotating.

In practice the bowl rotates inside a protective shell or housing and is heated in order that the electrolyte can be maintained at proper impregnation temperature. The capacitor windings are generally held in perforated aluminum baskets to facilitate handling and subsequent drainage of surplus electrolyte.

Digitized by Google Original from UNIVERSITY OF MICHIGAN

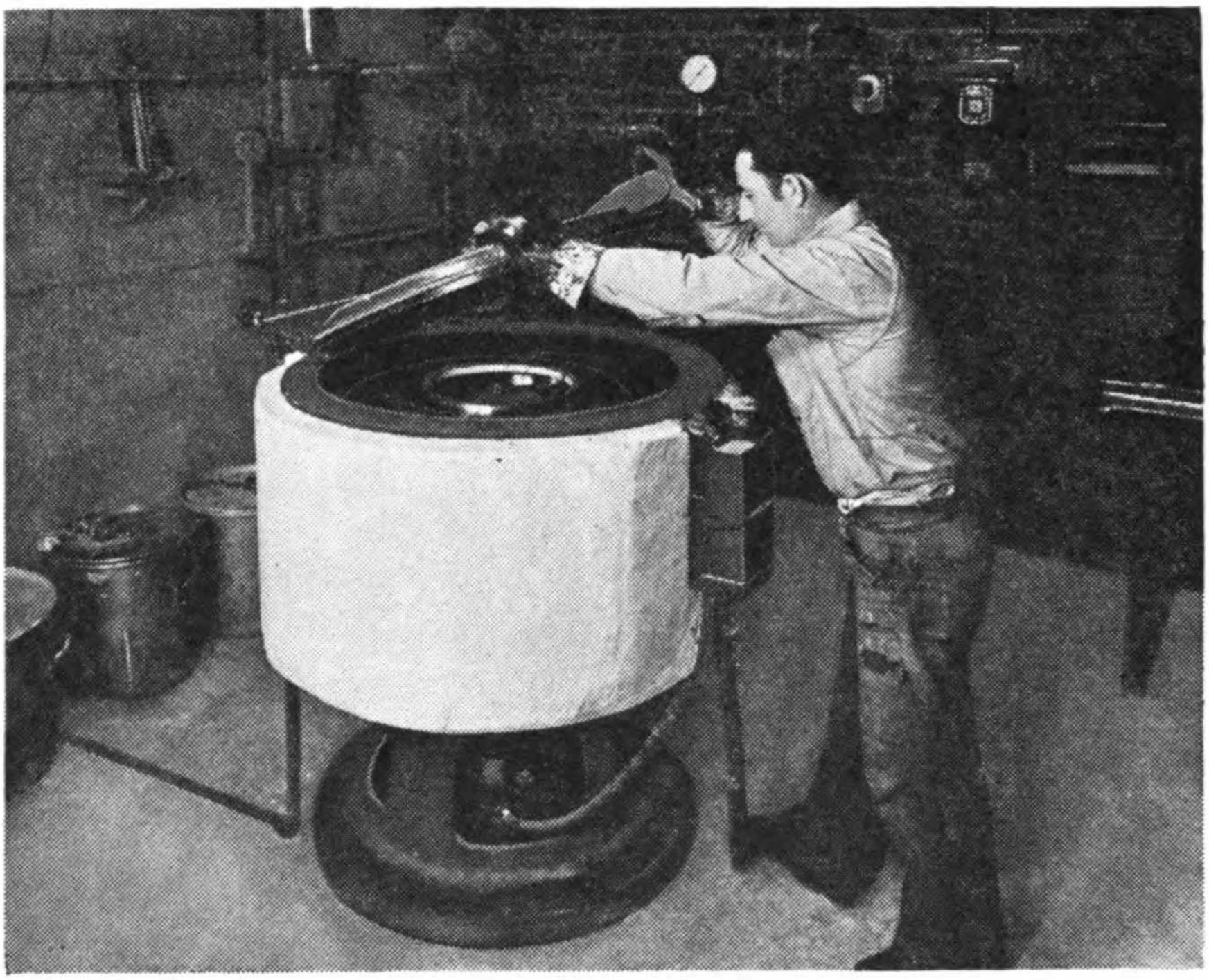

(*Courtesy Cornell-Dubilier Electric Corp.*)

Commercial type of centrifuge.

The above illustration shows a typical installation of a modern type of centrifuge such as is employed for the centrifugal impregnation of dry electrolytic capacitor windings.

Digitized by Google Original from UNIVERSITY OF MICHIGAN

Chapter XII

TYPES OF DRY ELECTROLYTIC CAPACITORS

DRY electrolytic capacitors are divided into two general classifications termed polarized types and non-polarized types. The polarized type is the more commonly used type and consists of anode and cathode foils with the electrolyte saturated separator interposed between. The non-polarized type consists of two anode foils with the electrolyte saturated separator interposed between. The non-polarized type is sometimes called the alternating current type due to its special application to alternating current circuits and for that reason a complete description of the non-polarized type will be found in the chapter devoted especially to this type and its application.

Multiple Section, Polarized Type

Where circuit application requires the use of more than one value of capacity and the positive or negative terminals, of all capacities required, are connected to a common point in the circuit network, a concentrically wound multiple section capacitor may be employed. If the common connection point is negative, the multiple section capacitor is called a common cathode concentrically wound unit. Such a unit consists of one cathode foil and one or more separate anode foils, with electrolyte saturated separator interposed in between. In this type construction the dielectric film on each anode foil

Digitized by Google Original from UNIVERSITY OF MICHIGAN

may be formed to the same voltage or, on the other hand, formed to entirely different voltages, depending obviously on potential requirements of circuit application. A schematic representation of such types is shown in the following illustrations:

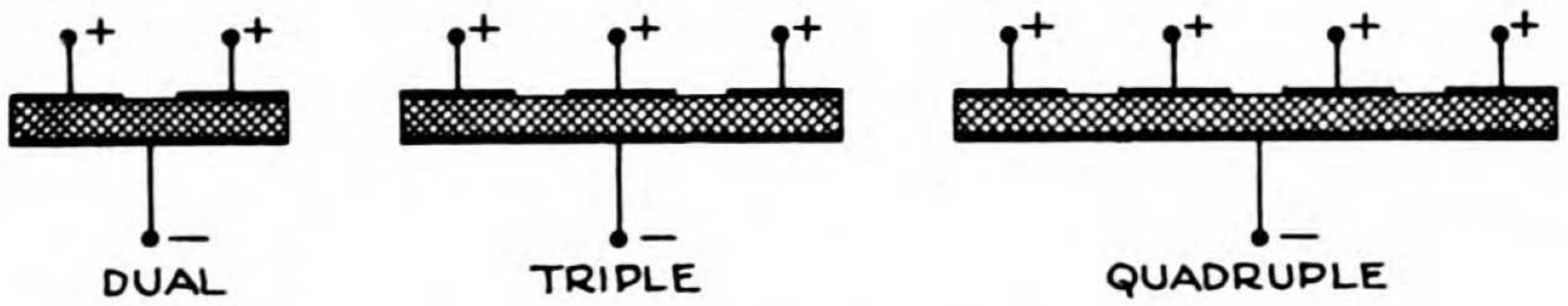

Also, in the common cathode, concentrically wound multiple section capacitors, the cathode foil and the electrolyte saturated separator are in continuous strips or pieces. The appearance of a completed winding of this type may be observed by referring to the following illustration of a dual section:

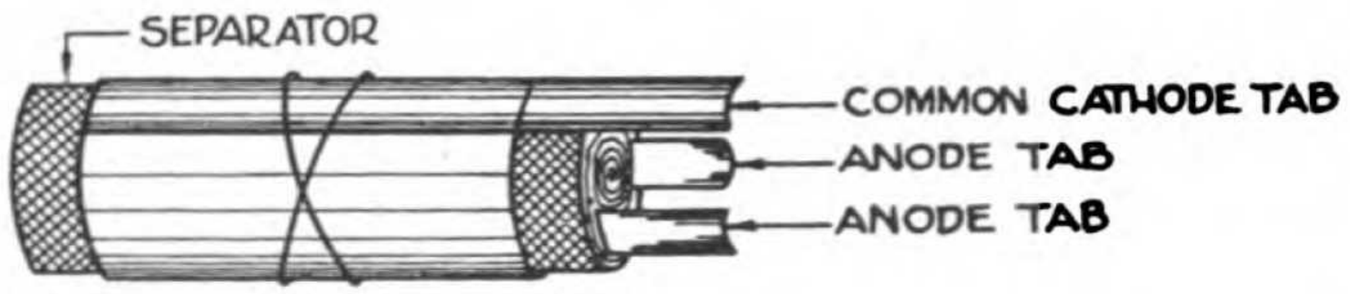

Summarizing the above mentioned data, common cathode, concentrically wound, dry electrolytic capacitors may be constructed by using one cathode foil which is common to one or more anode foils. In this construction, the individual anode foils may be of any capacity or voltage rating. In other words, in one concentric winding, the individual anode foils do not have to be similar in respect to either capacity or voltage. There are some disadvantages to the employment of multiple section capacitors of this type, in certain

Digitized by Google Original from UNIVERSITY OF MICHIGAN

circuit applications but this subject will be covered, in detail, in the chapter devoted to the uses of dry electrolytic capacitors.

Common anode, concentrically wound, dry electrolytic capacitors differ from the common cathode type in that the common foil is the anode which is in turn common to one or more cathode foils.

There are definite limitations to this type of construction. The cathode foils are not the other conducting surfaces of the respective capacitors as this is the function of the electrolyte. From this fact it becomes apparent that the electrolyte, in each section of the concentric winding, must be isolated electrically or one of the cathode foils may become positive in respect to the electrolyte. In other words, the electrolyte must not be common.

Another limitation is that the common anode foil must be formed, over its entire surface, to a potential equal to the potential of the highest voltage rating of any one capacitor section in the winding. This fact may entail an economical waste of material in certain capacity and voltage combinations.

The physical and electrical isolation of the electrolyte between sections frequently presents serious mechanical construction problems. For a more complete understanding of why it is necessary to isolate the electrolyte, reference is made to the following schematic diagram.

This schematic diagram shows a typical filter network with an inductance L in the negative side of the circuit and a common anode, concentrically wound,

Digitized by Google Original from UNIVERSITY OF MICHIGAN

electrolytic capacitor with the negative terminals connected across the inductance L.

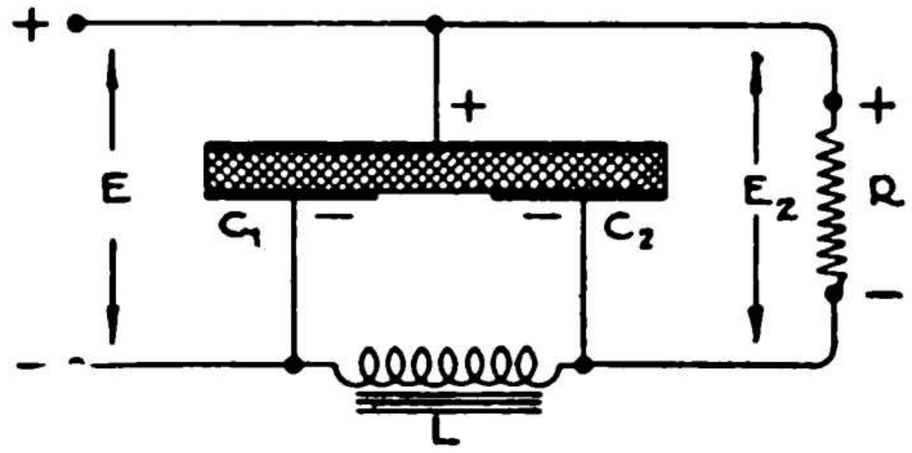

For the sake of illustration, assume that the potential applied to the network, as indicated by the voltage E_1, is 400 volts direct current. Also assume that the resistive load R is of such a value that the current flowing through the inductance L, causes a potential drop in the inductance of 100 volts. This potential drop, of course, is the resultant of the current times the resistance of the inductance L and the voltage at E_2 will become 300 volts. The net result is a potential of 400 volts applied to capacitor section C_1, and a potential of 300 volts applied to section C_2. If the electrolyte is common to the two cathode foils corresponding to C_1 and C_2 then a positive potential of 100 volts will be applied between the electrolyte and one of the cathode foils. As the cathode foil is unfilmed the result is a relatively large current flow between the two cathode foils. Two effects result from this flow of current. Either the positively polarized cathode foil acquires an anodic film or the current flow represents a resistance in parallel with the inductance L. Both effects are equally undesirable. The first will cause an effective reduction in the original capacity of C_1 and the second will reduce the effective value of inductance of L. It

Digitized by Google Original from UNIVERSITY OF MICHIGAN

obviously becomes necessary to form the cathode plate of C_1 to a potential equal to the voltage difference between E_1 and E_2 and add to the areas of both anode and cathode foil surfaces of C_1 to compensate for the reduction in desired capacity or completely isolate the electrolyte in one section from the electrolyte in the other. Both methods are frequently employed but the latter is by far the more satisfactory.

One method of isolating the electrolyte between sections, in a concentric winding, is shown in the following illustration:

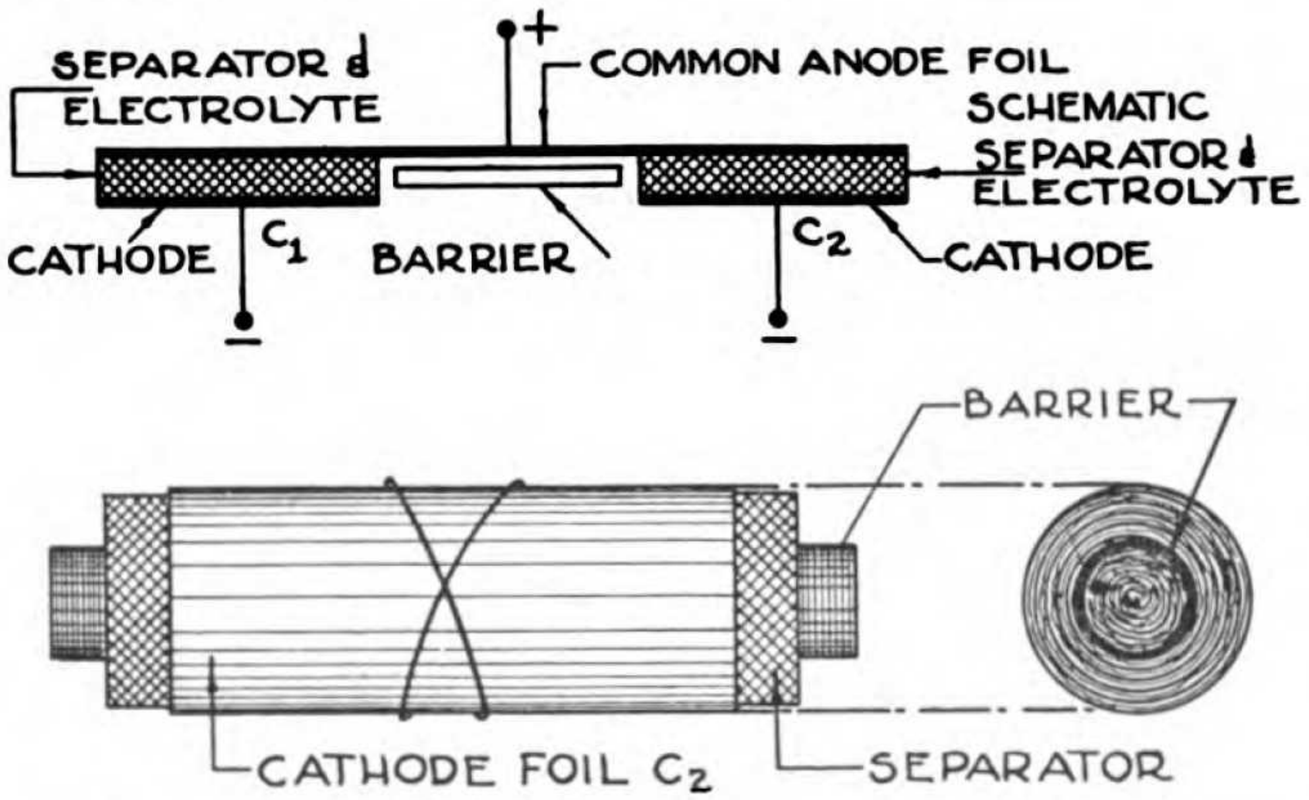

In this method it is customary to wind one capacitor section (C_1), then wind a section of insulating material such as varnished paper or cambric of sufficient width to provide a projecting barrier and of sufficient length to provide from one and a half to two complete turns. The other capacitor section (C_2) is then wound. The barrier of insulating material keeps the electrolyte in section C_1 separate from that in section C_2.

Common anode, concentrically wound, dry electrolytic capacitors are seldom fabricated in multiple units of more than two capacities.

Digitized by Google Original from UNIVERSITY OF MICHIGAN

Containers Used for Dry Electrolytic Capacitors

Due to the non-aqueous nature of the electrolytes generally employed in dry electrolytic capacitors, constructions are not limited to liquid tight metallic containers as is the case with wet electrolytic structures. For that reason, dry electrolytic capacitors are housed in all types and shapes of cardboard as well as metal containers.

The simplest construction employed is a cardboard tube, from each end of which projects connection terminals. In this construction the terminals usually take the form of bare leads of tinned copper. The capacitor winding proper is sealed or potted into the cardboard tube with an asphalt or asphalt base sealing compound of high chemical purity. The cardboard tube is either impregnated in a wax or varnish to make it moisture-proof. Such a cardboard tubular construction is shown in the following illustration:

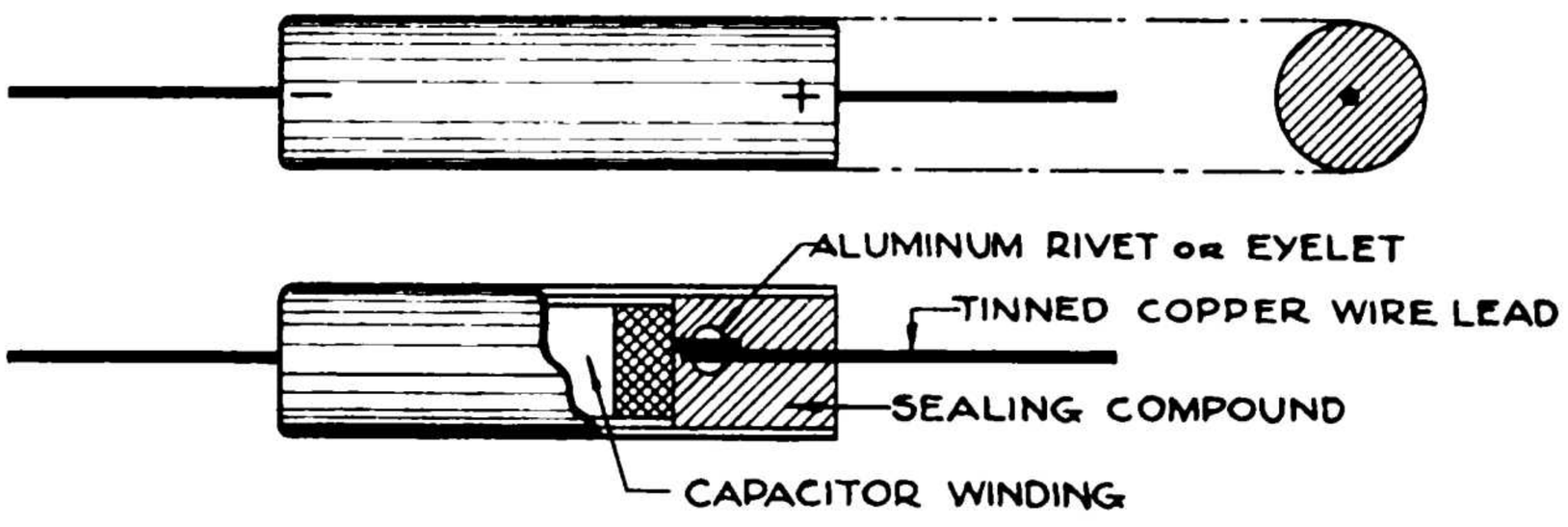

Tubular cardboard encased units of the above construction are generally confined to capacitors whose voltage and capacity ratings represent small physical sizes. Larger sizes are also encased in cardboard, both in single as well as multiple section constructions. Such a construction is shown in the following illustration:

Digitized by Google Original from UNIVERSITY OF MICHIGAN

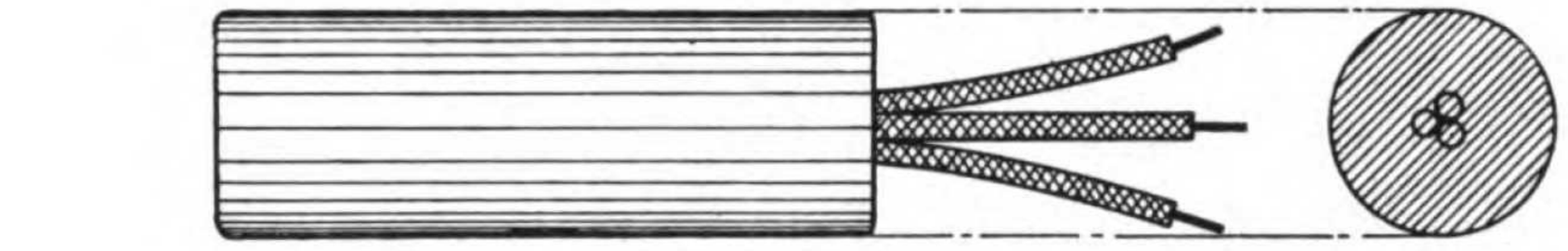

Dry electrolytic capacitors are also commonly supplied in rectangular shaped cardboard containers. In fact both shape and size are practically unlimited, being arranged to meet each specific application.

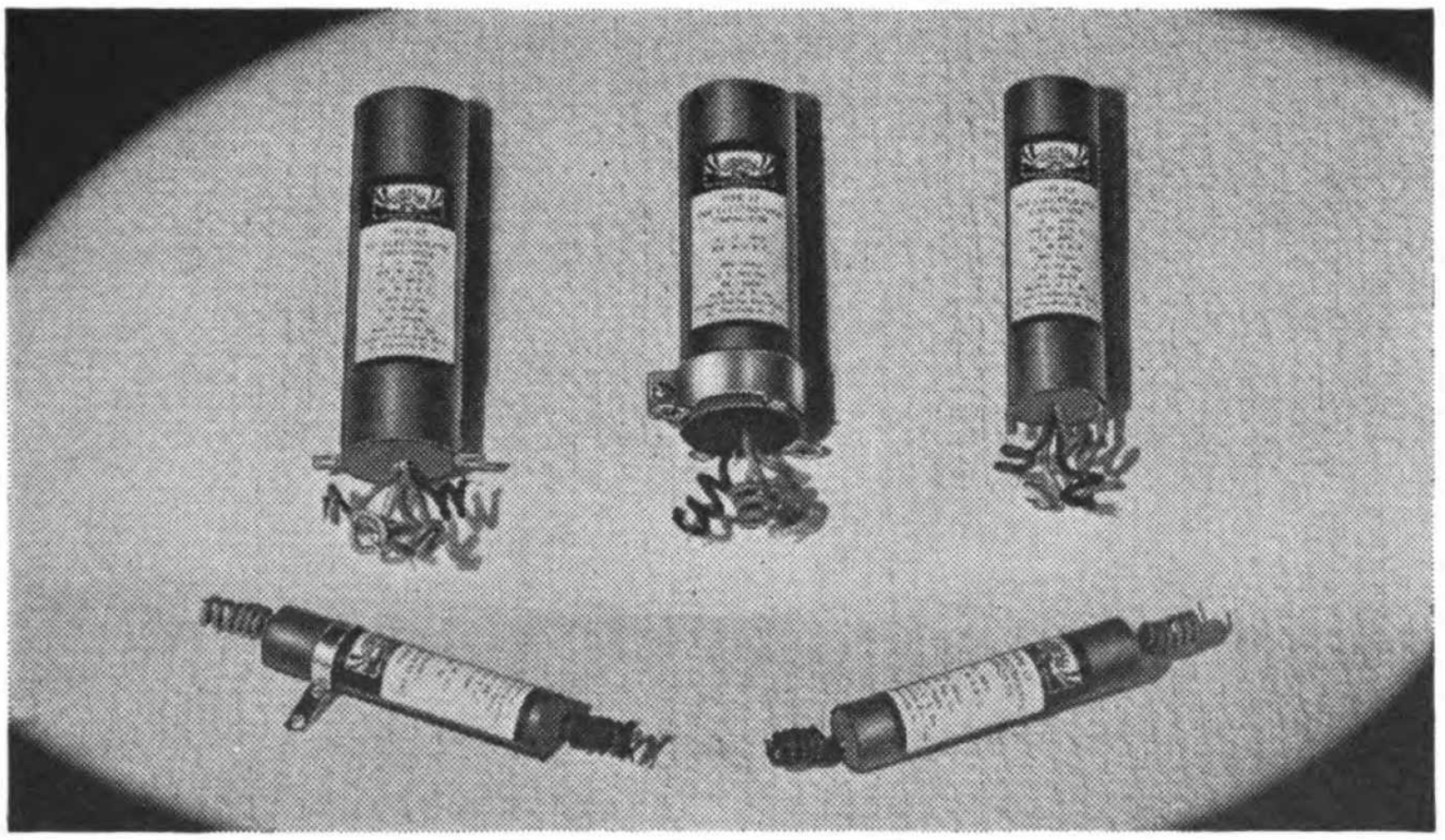

(Courtesy Cornell-Dubilier Electric Corp.)

Examples of round, cardboard encased dry electrolytic capacitors. The various standard methods of mounting can be observed.

Digitized by Google Original from UNIVERSITY OF MICHIGAN

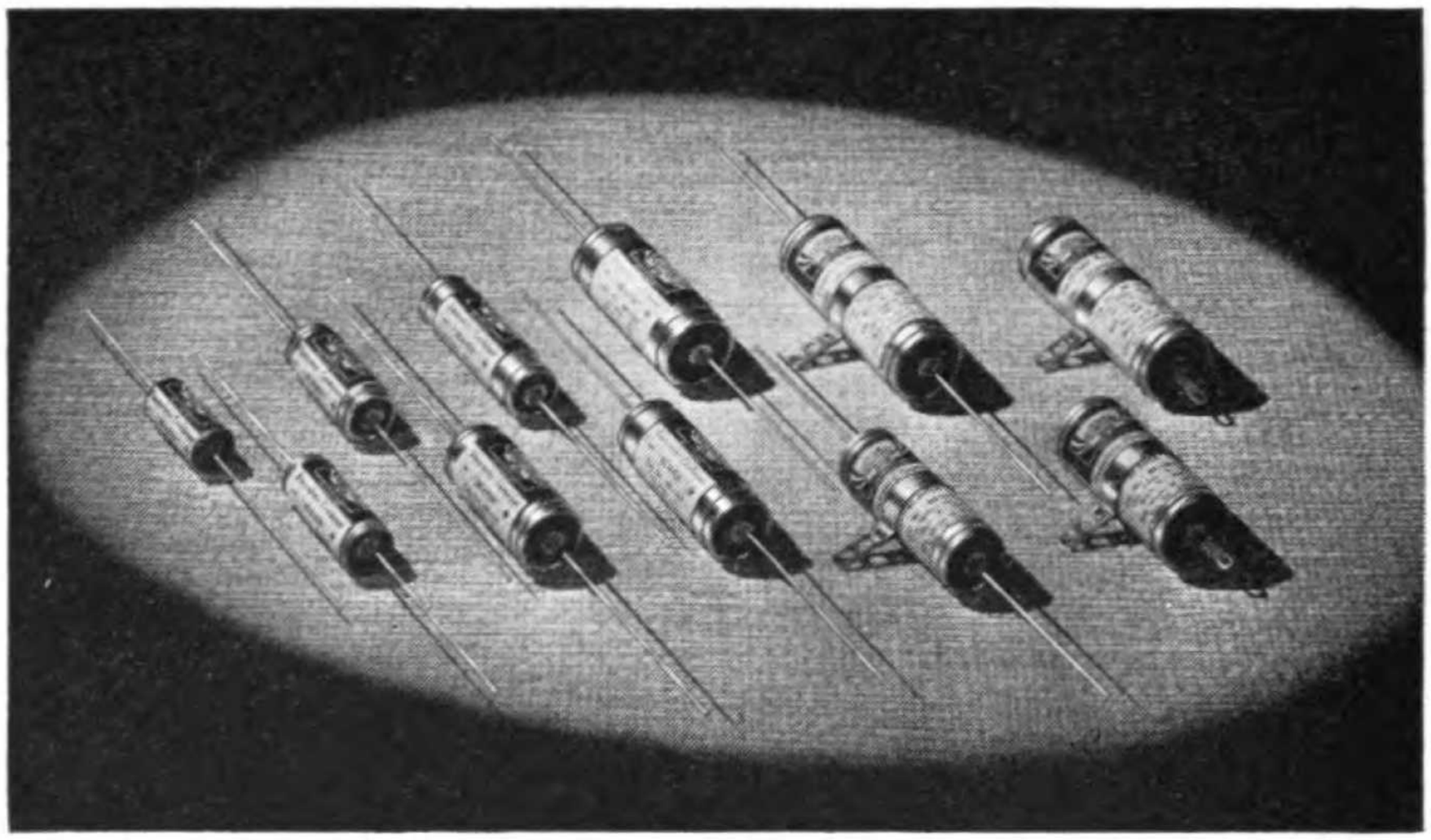

(Courtesy Cornell-Dubilier Electric Corp.)

Examples of round, cardboard encased dry electrolytic capacitors. The various standard methods of mounting can be observed.

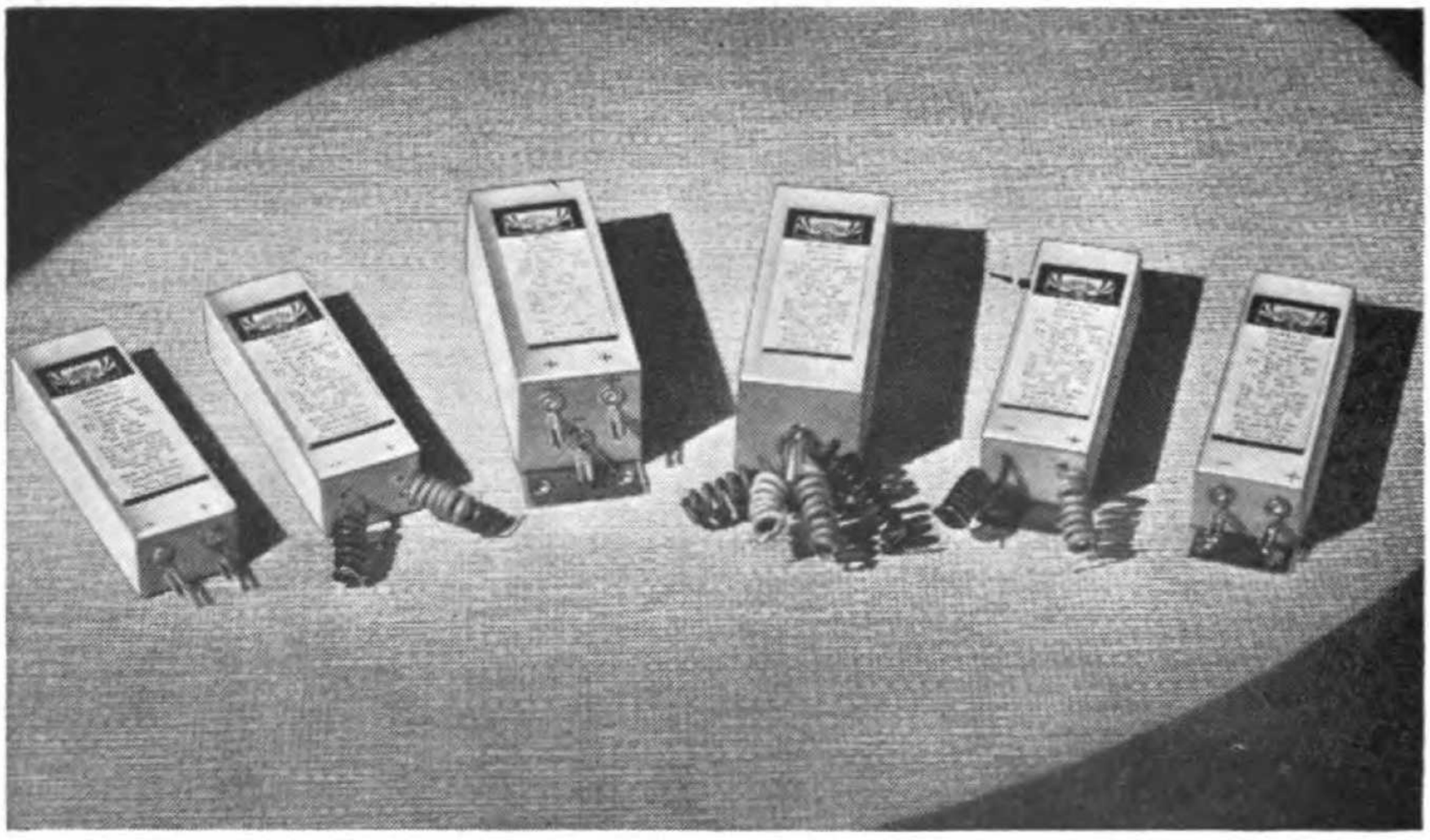

(Courtesy Cornell-Dubilier Electric Corp.)

Examples of standard rectangular, cardboard box encased dry electrolytic capacitors.

Digitized by Google Original from UNIVERSITY OF MICHIGAN

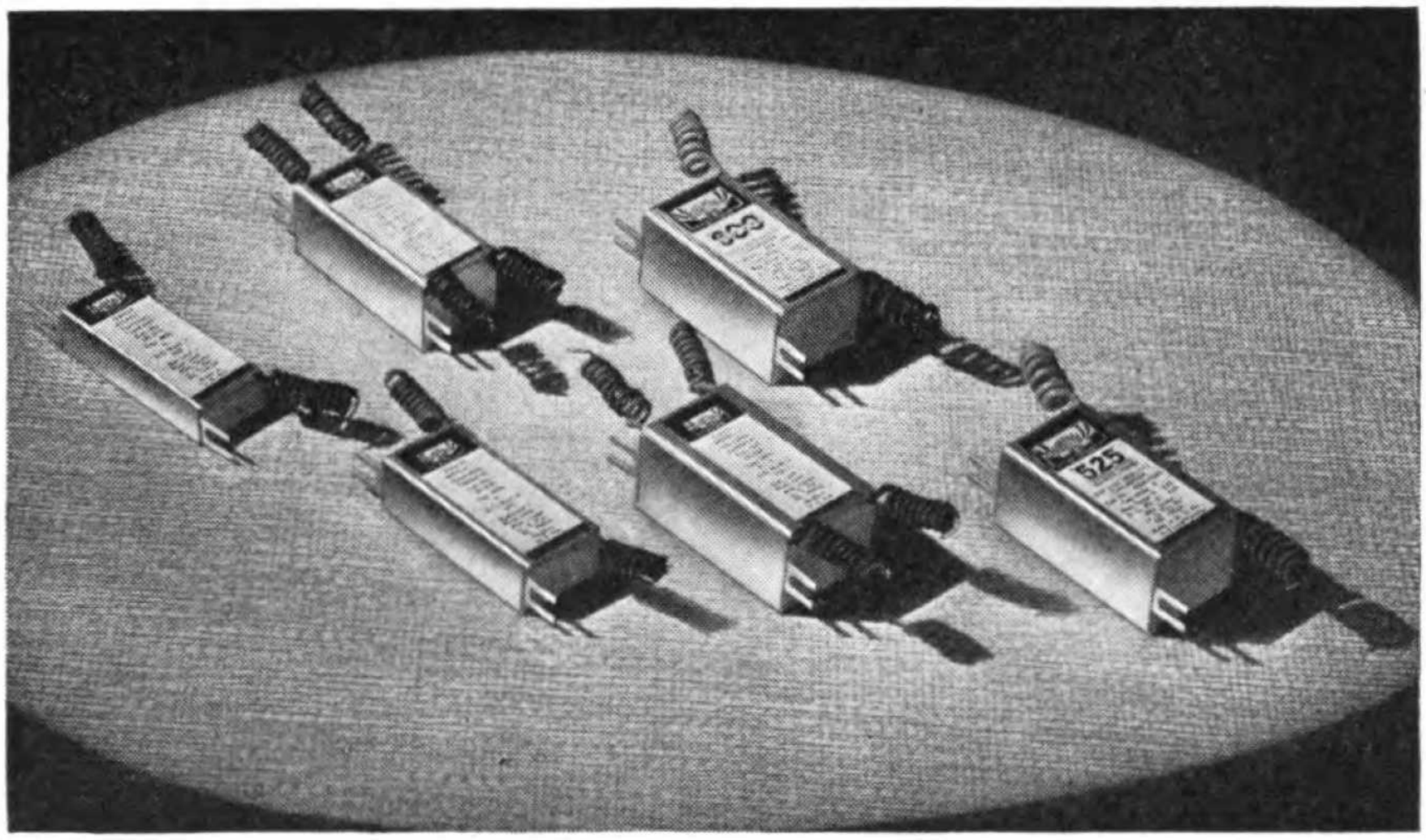

(Courtesy Cornell-Dubilier Electric Corp.)

Examples of standard rectangular, cardboard box encased dry electrolytic capacitors.

Metal containers, both round and rectangular, are also in common use. Typical illustrations follow.

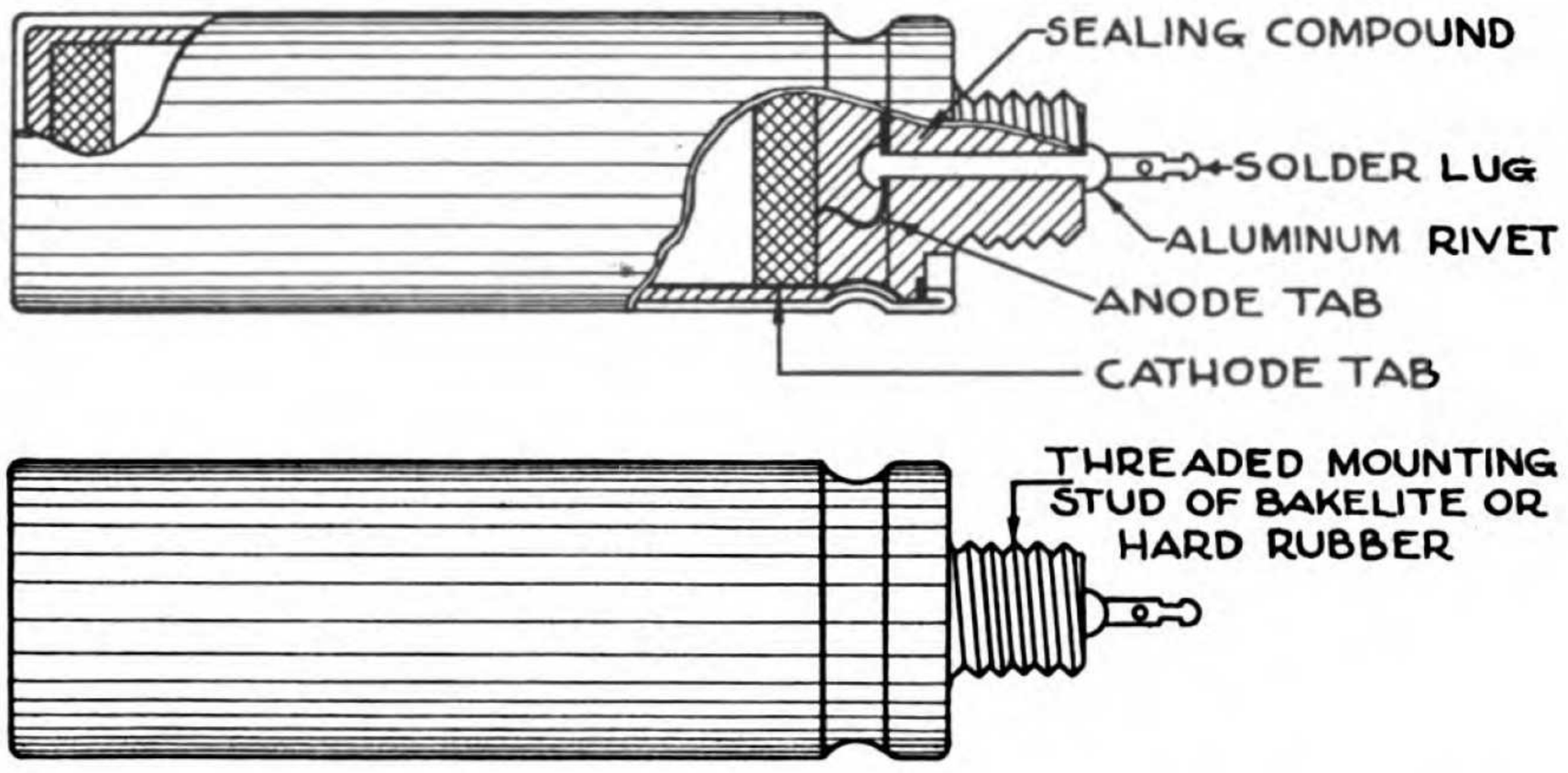

In the above illustrated construction, the capacitor is placed into a round aluminum can. In the open

Digitized by Google Original from UNIVERSITY OF MICHIGAN

end of the can a moulded bakelite or hard rubber stud is fastened into place by crimping or turning over the can edge; the stud resting in turn on a shoulder or bead indented into the can wall. This stud is threaded in order that the entire assembly may be mounted vertically on a metal plate or radio chassis. The anode tab has a hole in it and through this hole passes an aluminum rivet, the other end of which is riveted or swaged over to hold in turn a solder lug for external electrical connection. The cathode foil tab is usually connected to the can by crimping it under the rim of the can.

This same construction is also employed for multiple section capacities with either solder lug terminals or flexible wire leads.

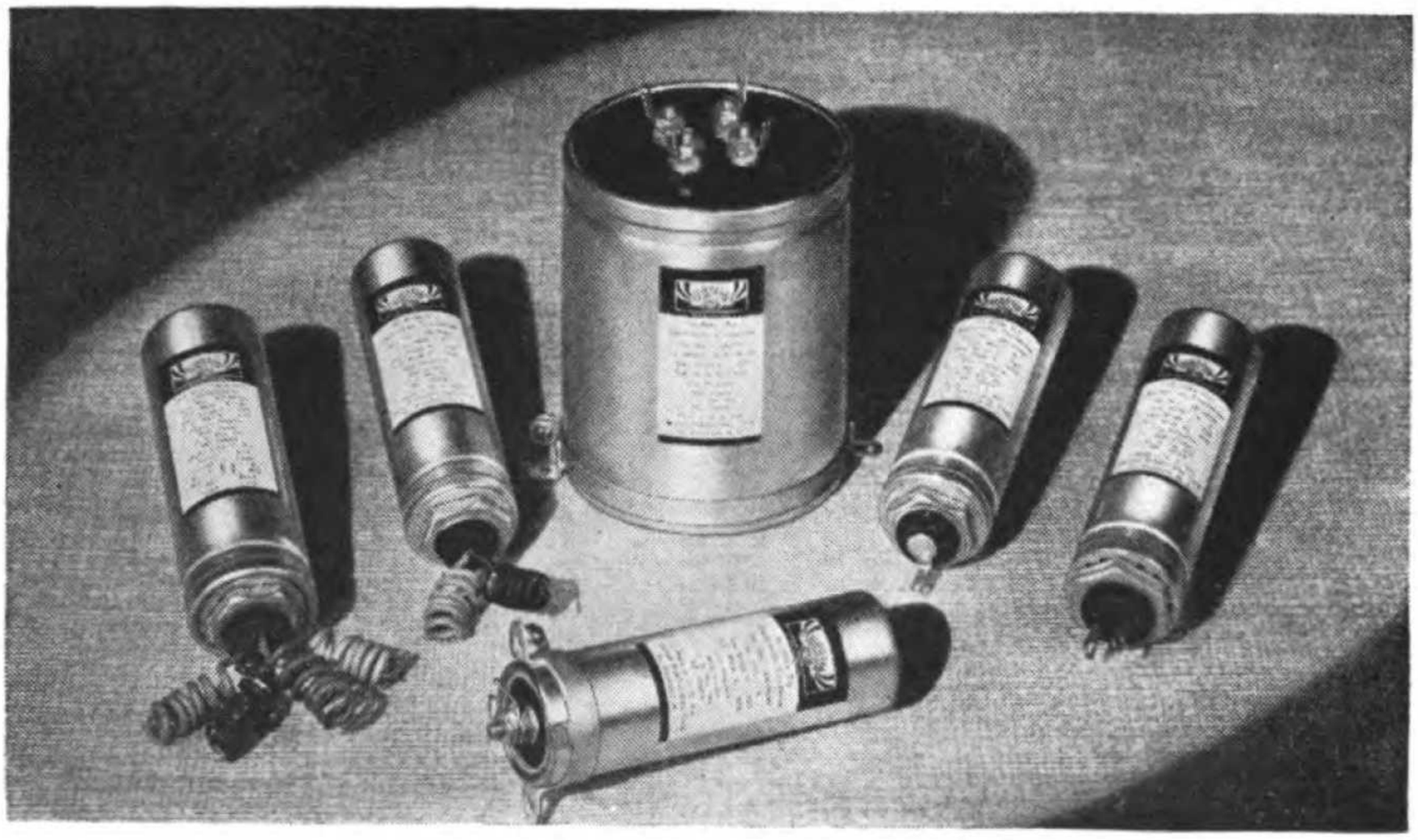

(Courtesy Cornell-Dubilier Electric Corp.)

Examples of standard round aluminum can encased dry electrolytic capacitors.

Digitized by Google Original from UNIVERSITY OF MICHIGAN

Other container types are shown in the following photographic illustrations:

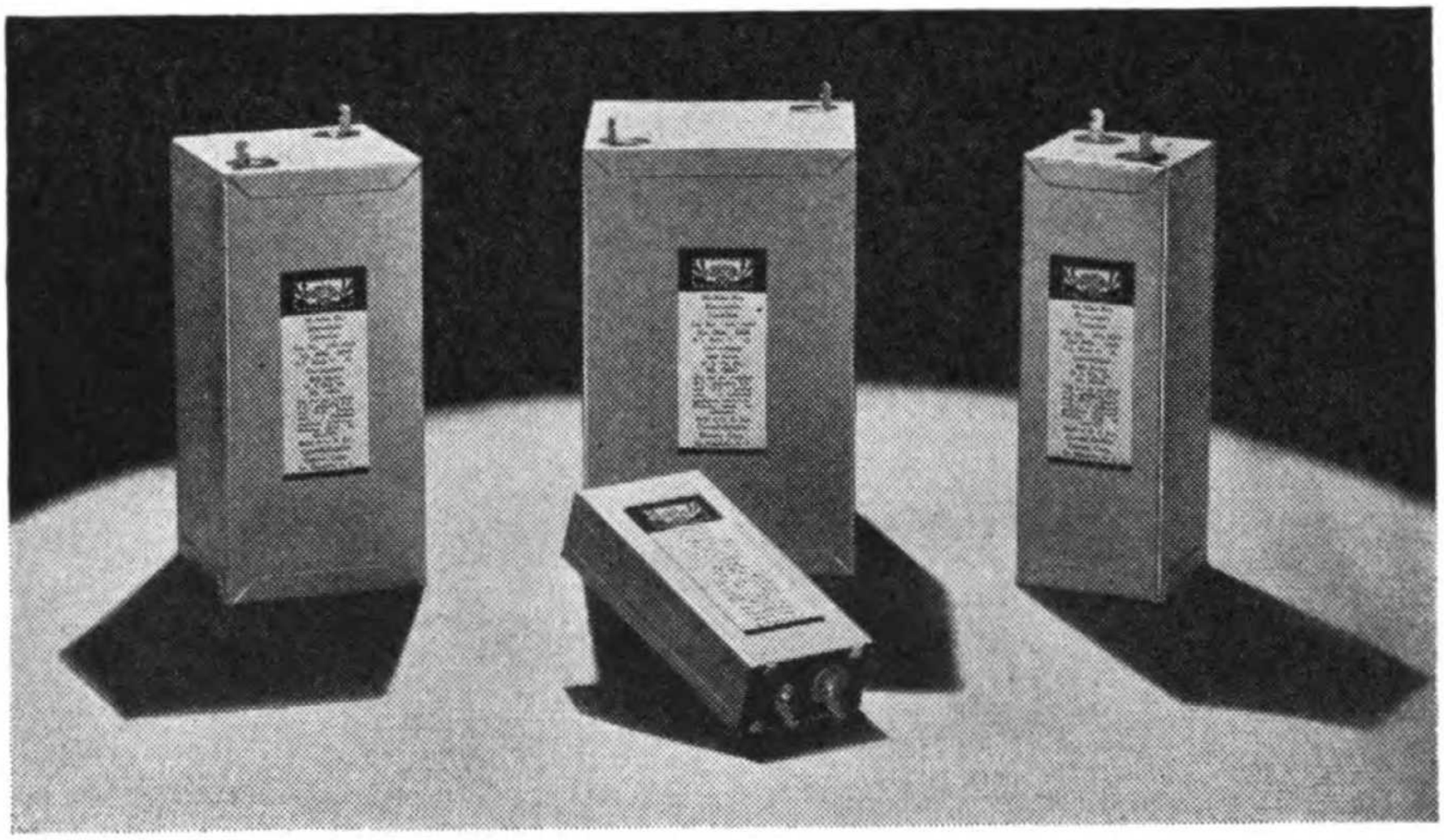

(Courtesy Cornell-Dubilier Electric Corp.)

Examples of standard low voltage—high capacity types of dry electrolytic capacitors encased in rectangular metal containers.

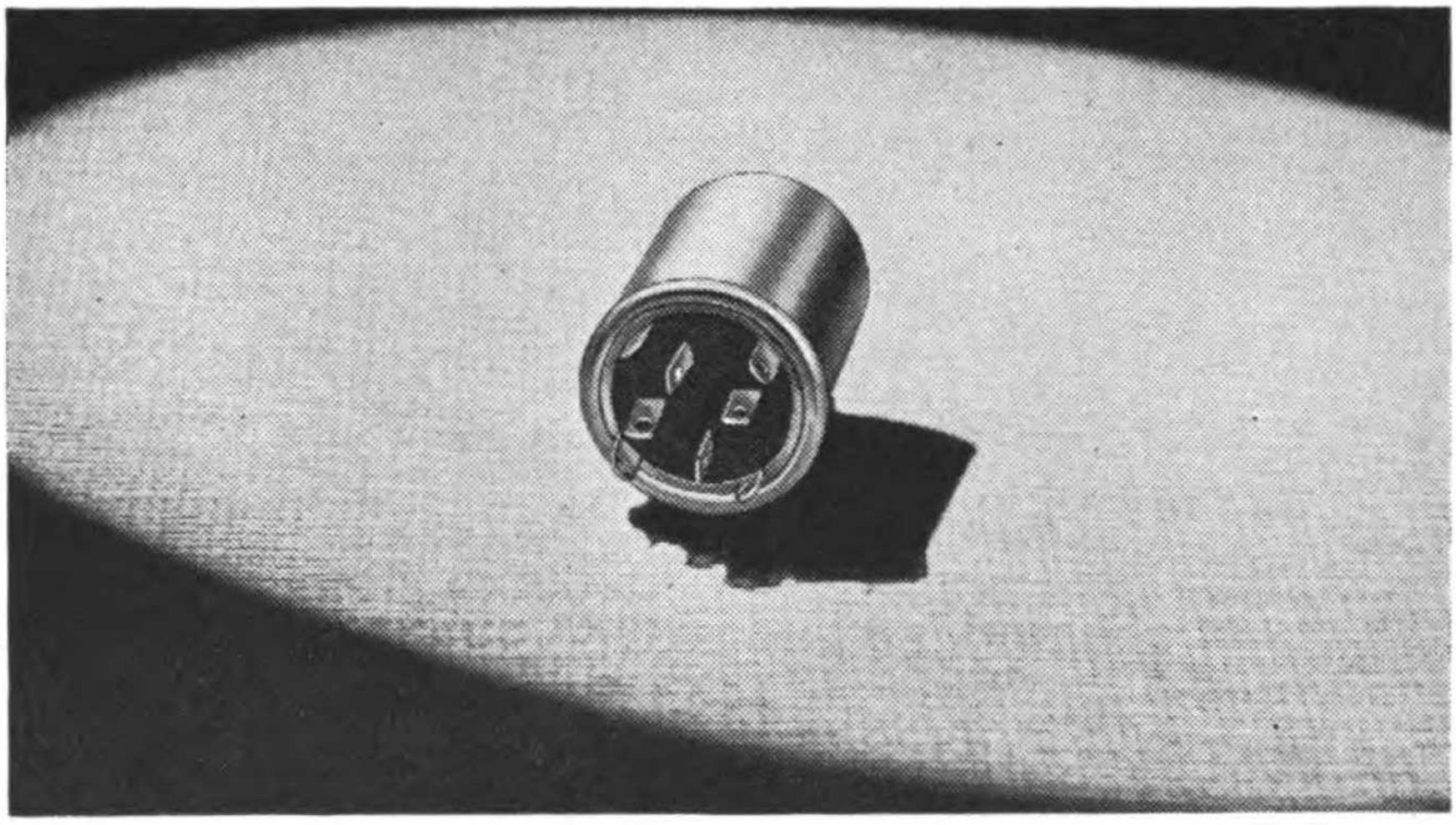

Socket mounting type of aluminum can encased dry electrolytic capacitor.

Digitized by Google Original from UNIVERSITY OF MICHIGAN

When the container is made of aluminum it is not necessary to insulate the capacitor proper from the container, provided that circuit requirements are such that the container can be the negative or common negative terminal, in the case of a multiple section. If the container is not made of aluminum, however, it is necessary to insulate the capacitor from the container and make provisions for preventing the electrolyte from coming in contact with it. Otherwise problems of corrosion will arise. Where circuit requirements are such that the capacitor must be insulated from the container or where the container is of some metal other than aluminum, it is customary to seal or pot the capacitor into a liner box, or inner container, of insulating material such as waxed or varnished paper or cardboard.

Digitized by Google Original from UNIVERSITY OF MICHIGAN

Chapter XIII

CHARACTERISTICS AND AGING OF DRY ELECTROLYTIC CAPACITORS

Electrical Characteristics of Dry Electrolytic Capacitors

THE essential electrical characteristics of dry electrolytic capacitors are similar to those of wet electrolytic capacitors, with the exception that a dry electrolytic capacitor cannot be operated, even momentarily, at the scintillating voltage of the structure. In a dry electrolytic capacitor the scintillating voltage ordinarily represents the breakdown voltage. This being the case, the important electrical characteristics become leakage current, capacity, breakdown voltage and equivalent series resistance. Methods of ascertaining or measuring these characteristics will be found in the chapter devoted to that subject.

Of equal importance and interest are the effects of time and temperature, on the above mentioned characteristics, under various conditions. Detailed data will be found in the following paragraphs.

Effect of Temperature on Leakage Current

As has been previously mentioned, the leakage current is primarily determined by the field strength, the thickness of the anode film and the conductivity of the electrolyte.

As the field strength is a function of applied voltage and anode film thickness, the leakage current can be

Digitized by Google Original from UNIVERSITY OF MICHIGAN

considered as being determined by the applied voltage, anode film thickness and the conductivity of the electrolyte. Variations in the temperature of the electrolyte have been shown to cause variations in its conductivity. Variations in ambient temperature therefore cause changes in the leakage current of a dry electrolytic capacitor. The effective amount of change in leakage current with a definite variation in ambient temperature depends also on the conductivity of the electrolyte. Stated more clearly this means that a high resistance electrolyte shows a different rate of change of leakage current with temperature variations than does a lower resistance electrolyte. To illustrate this characteristic, reference is made to the following graphic figure.

From a study of this illustration it appears that the change in leakage current is not as great, over a comparatively wide range of temperature variation, as

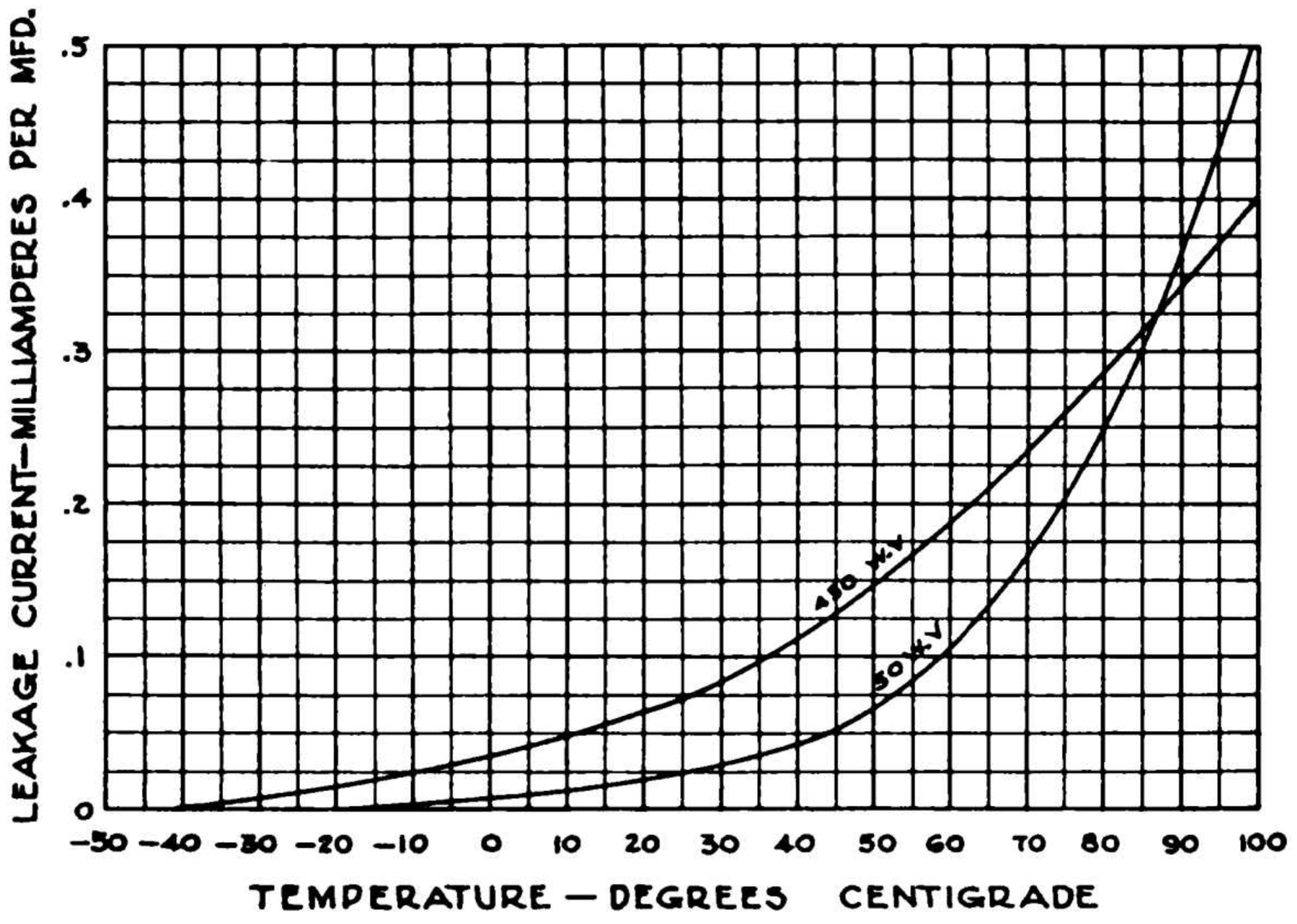

Digitized by Google Original from UNIVERSITY OF MICHIGAN

might be expected. The reason for this is that the use of the lower resistance or more conductive electrolytes is confined to the lower voltage capacitor structures while the capacitors intended for operation at the higher voltages are limited to the use of electrolytes of high resistivities or low conductivities. Thus, the effect of high conductivity of electrolyte is offset in one case by low field strength and in the other case a high field strength is offset by a low conductivity of electrolyte. This fortunate balance of one set of factors against another is not encountered in the effect of temperature change on other characteristics.

Effect of Temperature on Capacity

It is doubted that changes in temperature of the electrolyte actually change the capacity of an electrolytic capacitor as there is no ready explanation of just why this should be the case. The fact remains, however, that the effective capacity does change with change in electrolyte temperature. Whether the effective change in capacity is due entirely to change in electrolyte conductivity or to some extent to an actual change in dielectric constant of the oxide film, is not definitely known.

It is known, on the other hand, that the more conductive the electrolyte employed in a dry electrolytic capacitor, the less the change in effective capacity over a given range of temperature variation. As the more conductive electrolytes are limited in application to the lower voltage capacitors it becomes apparent that the lower voltage capacitors have better temperature char-

Digitized by Google Original from UNIVERSITY OF MICHIGAN

acteristics than the higher voltage capacitors. It is unfortunate that this is true because such a characteristic may frequently limit the usefulness of the higher voltage capacitor structures.

The effects of temperature change on effective capacity are shown in the following illustration. In this illustration the per cent change in normal capacity values at room temperature (21° C) is plotted against various temperatures. Three types of capacitors are shown: namely, 50 working volt, 300 working volt and 450 working volt. In each capacitor structure an electrolyte of corresponding conductivity has been employed. That is, the conductivity of each electrolyte employed is as high as can normally be used for each representative voltage value:

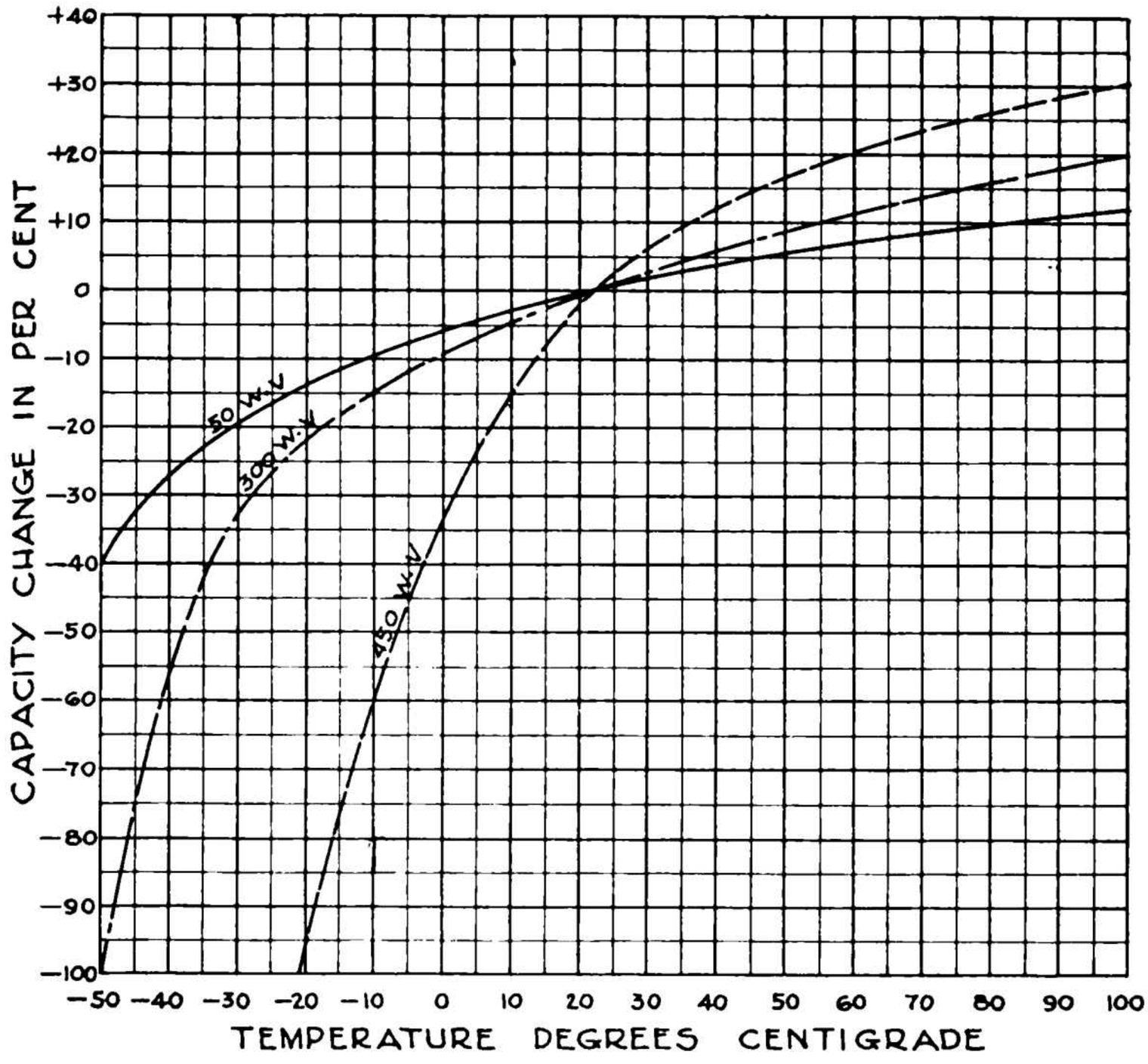

Digitized by Google Original from UNIVERSITY OF MICHIGAN

Effect of Temperature on Breakdown Voltage

As the breakdown voltage or potential is a function of the anode film thickness and conductivity of the electrolyte, and the conductivity of the electrolyte varies with the temperature, it must hold true that the voltage breakdown is also a function of temperature. Increases in temperature cause increases in electrolyte ionization with resultant increase in electronic emission from the electrolyte. This lowers the potential required to rupture or puncture the dielectric or oxide film. Thus, an increase in temperature results in a lowering of the breakdown voltage and a decrease in temperature causes an increase in the voltage breakdown of any specific dry electrolytic capacitor structure. No graphic illustration of this effect of temperature change is shown as there are other factors which also concern the breakdown voltage. Reference is particularly made to the type of separator material employed. These various other factors will be mentioned again in later paragraphs.

Effect of Temperature on Equivalent Series Resistance

Practically all types of electrolytes show the characteristic of a variation in conductivity with a change in temperature. An increase in temperature results in an increase in conductivity and a decrease in temperature causes a decrease in conductivity. The degree of variation in conductivity with change in temperature is a function of the ion concentration of the electrolyte. In other words, the more conductive an electrolyte is,

Digitized by Google Original from UNIVERSITY OF MICHIGAN

the smaller the change in conductivity with variation in temperature.

The main contributing factor to total equivalent series resistance values of dry electrolytic capacitors is the specific resistivity of the electrolyte employed. Thus it is seen that values of equivalent series resistance are subject to change with variations in temperature.

Illustrative of such characteristics are the following graphic comparisons:

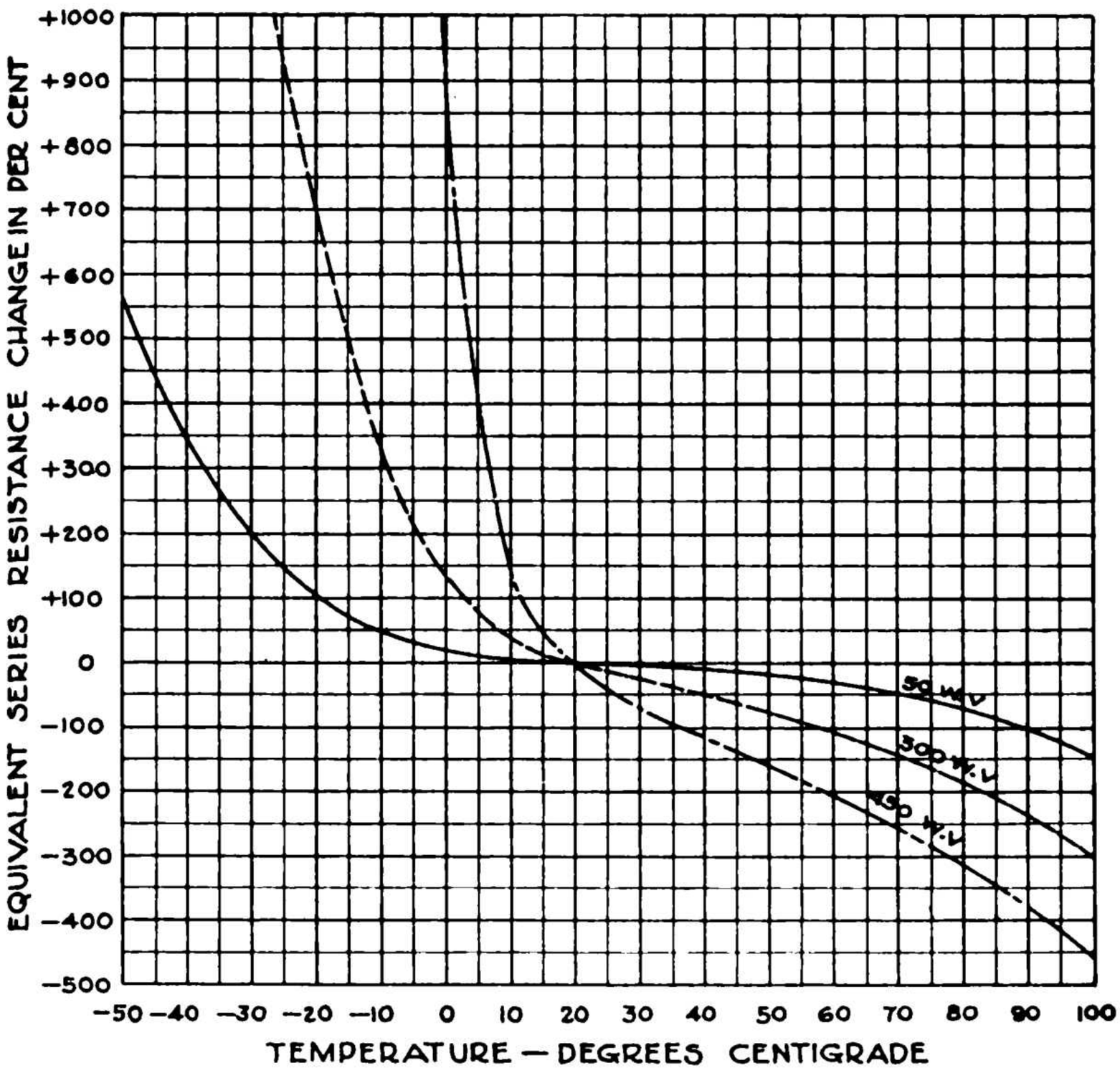

As the more conductive electrolytes are limited, in actual application, to the lower voltage capacitor structures it is evident that the lower voltage type capacitor

Digitized by Google Original from UNIVERSITY OF MICHIGAN

has the better temperature characteristic as compared to the higher voltage structures.

A summary of the collective effects of temperature variation on the characteristics of dry electrolytic capacitors can be outlined as follows:

An increase in temperature causes a minor increase in effective capacity but a large decrease in equivalent series resistance.

A decrease in temperature causes a relatively large decrease in effective capacity but causes a greater increase in equivalent series resistance.

An increase in temperature causes an increase in direct current leakage but a material decrease in temperature causes an extreme decrease in direct current leakage.

Extreme increases in temperature may result in a loss of moisture from the electrolyte (by evaporation) with a resultant permanent decrease in capacity and increase in equivalent series resistance. A shortened effective life would be the final result.

Extreme decreases in temperature may result in a reduction in effective capacity to a value of almost zero and an almost infinite increase in equivalent series resistance. This, however, causes no permanent injury to the capacitor structure and normal characteristics will be again obtained when the temperature is again brought back to normal values.

The temperature characteristics of dry electrolytic capacitors vary with the temperature characteristics of the electrolytes employed and the temperature characteristics of electrolytes, in turn, vary with the conductivity of the electrolyte.

Digitized by Google Original from UNIVERSITY OF MICHIGAN

An increase in temperature also causes an increase in the possibility of corrosion taking place in the capacitor structure if, of course, there are any corrosive substances present.

An increase in temperature may also cause the electrolyte to become sufficiently liquid to leak or run out of the capacitor winding. This may, at times, be highly objectionable.

Direct Current Leakage

As the direct current leakage of a dry electrolytic capacitor is controlled, to a large extent, by the ion concentration or conductivity of the electrolyte employed, leakage current values may vary to a considerable degree in a given type of capacitor structure. In actual practice, therefore, direct current leakage values are determined by a compromise between values of equivalent series resistance, voltage breakdown and stability of electrical and chemical characteristics.

Maximum permissible leakage current values are to some extent governed by circuit application limitations.

Average values of direct current leakage for various voltage structures are shown in the illustration on page 169.

Regulation

If the potential applied to a dry electrolytic capacitor exceeds the formation potential of the anodic film, a sharp increase in direct current leakage values will result. The reason for this characteristic has been pre-

Digitized by Google Original from UNIVERSITY OF MICHIGAN

viously mentioned in that leakage current is a function of field strength and anodic film thickness.

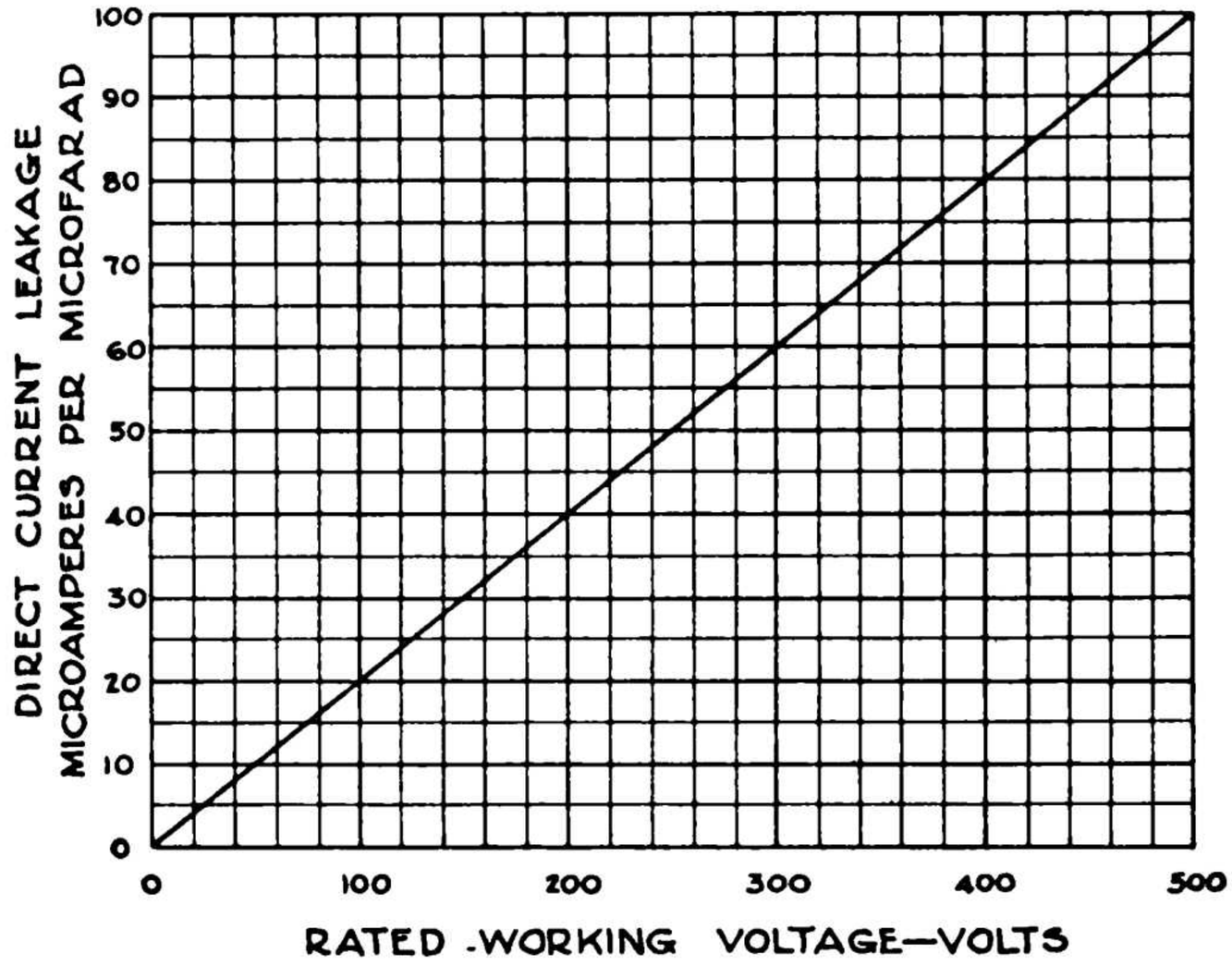

Advantage of this sharp increase in leakage current, with increase in applied voltage, is taken frequently to produce the so-called regulating type of capacitor.

The regulating characteristics of dry electrolytic capacitors are very similar to those of wet electrolytic capacitors with the important exception that dry electrolytic capacitor structures cannot have potentials applied to them which approach too closely the scintillating voltage, otherwise a permanent breakdown may occur. This obviously limits the construction of regulating types of dry electrolytic capacitors to a more narrow range of voltage application than the wet electrolytic structures cover.

Typical regulation characteristics are shown in the following illustration:

Digitized by Google Original from UNIVERSITY OF MICHIGAN

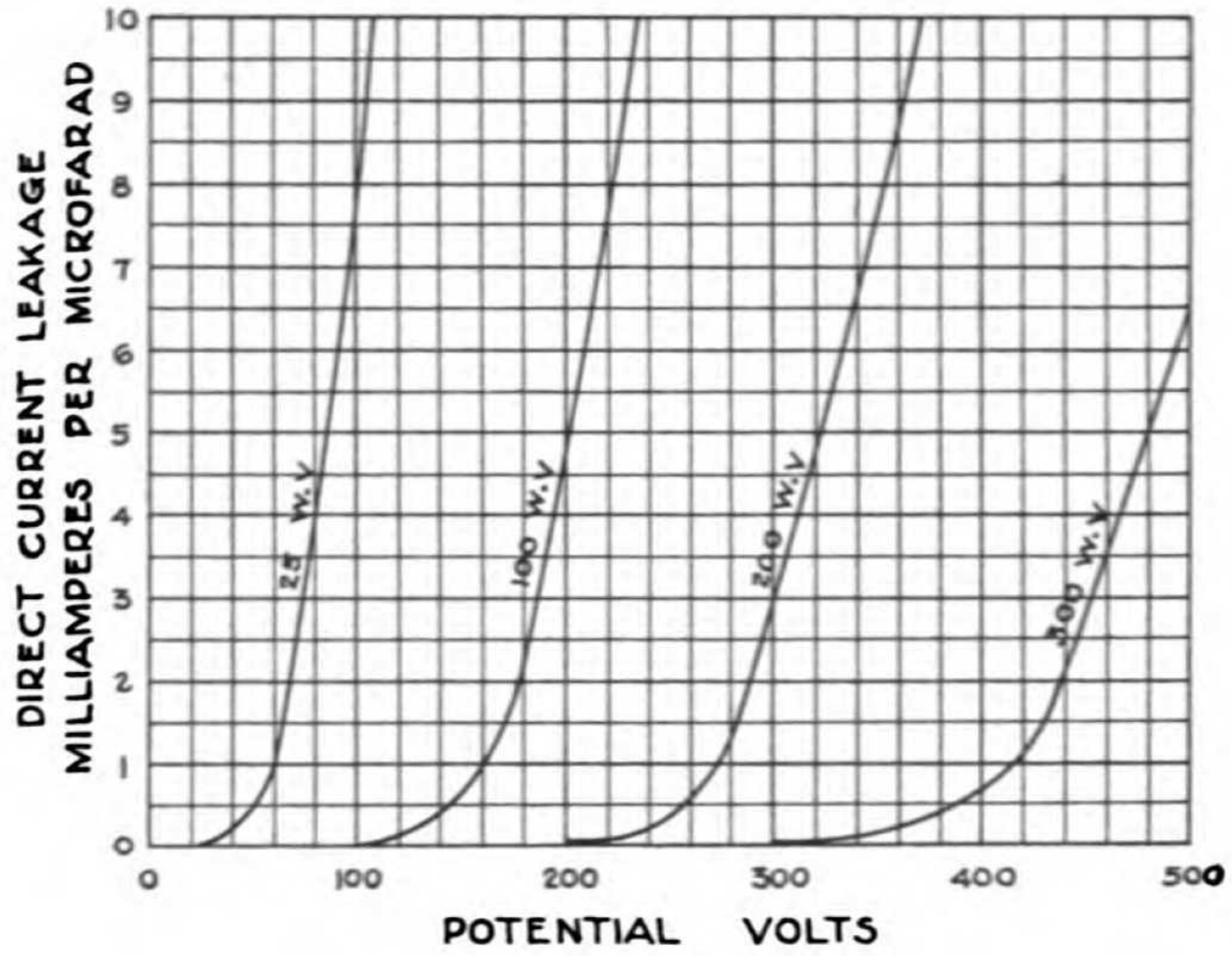

Equivalent Series Resistance

Each type of non-aqueous electrolyte has a certain specific resistivity and effectively this resistance can be considered as being in series with the capacity of the capacitor. In addition to the resistance of the electrolyte path there are other resistive factors. These are contact resistance between the electrolyte and the anodic film, and between the electrolyte and the surface of the cathode foil. These three resistance factors are in series and therefore additive.

It is somewhat difficult to exactly duplicate the conditions existing in an electrolytic capacitor by setting up an electrically equivalent network consisting of a pure lumped capacity in series with a lumped resistance. A close approximation of actual conditions is, however, obtained and for practical purposes such an equivalent circuit is therefore used.

Digitized by Google Original from UNIVERSITY OF MICHIGAN

The equivalent series resistance of a dry electrolytic capacitor thus becomes that value of resistance which, when connected in series with a pure capacity, will produce the same impedance at the same phase angle.

The equivalent series resistance of a dry electrolytic capacitor may be also expressed in terms of power factor of the capacitor.

Unless the capacitor is to be used in a tuned or resonant circuit network, the equivalent series resistance or power factor is not a relatively important factor. This fact will be substantiated in the chapters devoted to the applications of electrolytic capacitors.

The factors which determine equivalent series resistance values in dry electrolytic capacitor structures are resistivity of electrolyte and resistivity of contact between the electrolyte and the foil surfaces.

As the lower resistive electrolytes are limited in application to certain voltage structures it appears that the lower voltage capacitors will inherently possess lower values of equivalent series resistance. The difference is not, however, as great as might be first anticipated due to the fact that for a given capacity, a lower voltage structure employs a reduced total foil surface area which in turn increases the total equivalent series resistance. Lower voltage structures employing more conductive electrolytes do as a general rule possess lower values of equivalent series resistance. This fact becomes of relatively greater importance in connection with multiple capacitor windings containing capacitor sections of widely different voltage ratings. In such

Digitized by Google Original from UNIVERSITY OF MICHIGAN

cases, the electrolyte employed must be one suited to the capacitor section rated at the highest voltage. This results in a material increase in the equivalent series resistance values of the lower voltage sections.

In actual practice it should be therefore apparent that actual values of equivalent series resistance must, as a general rule, be the result of considerable compromise between voltage breakdown, leakage current and stability of electrical and chemical characteristics.

Average values of equivalent series resistance for various voltage structures are shown in the following illustration:

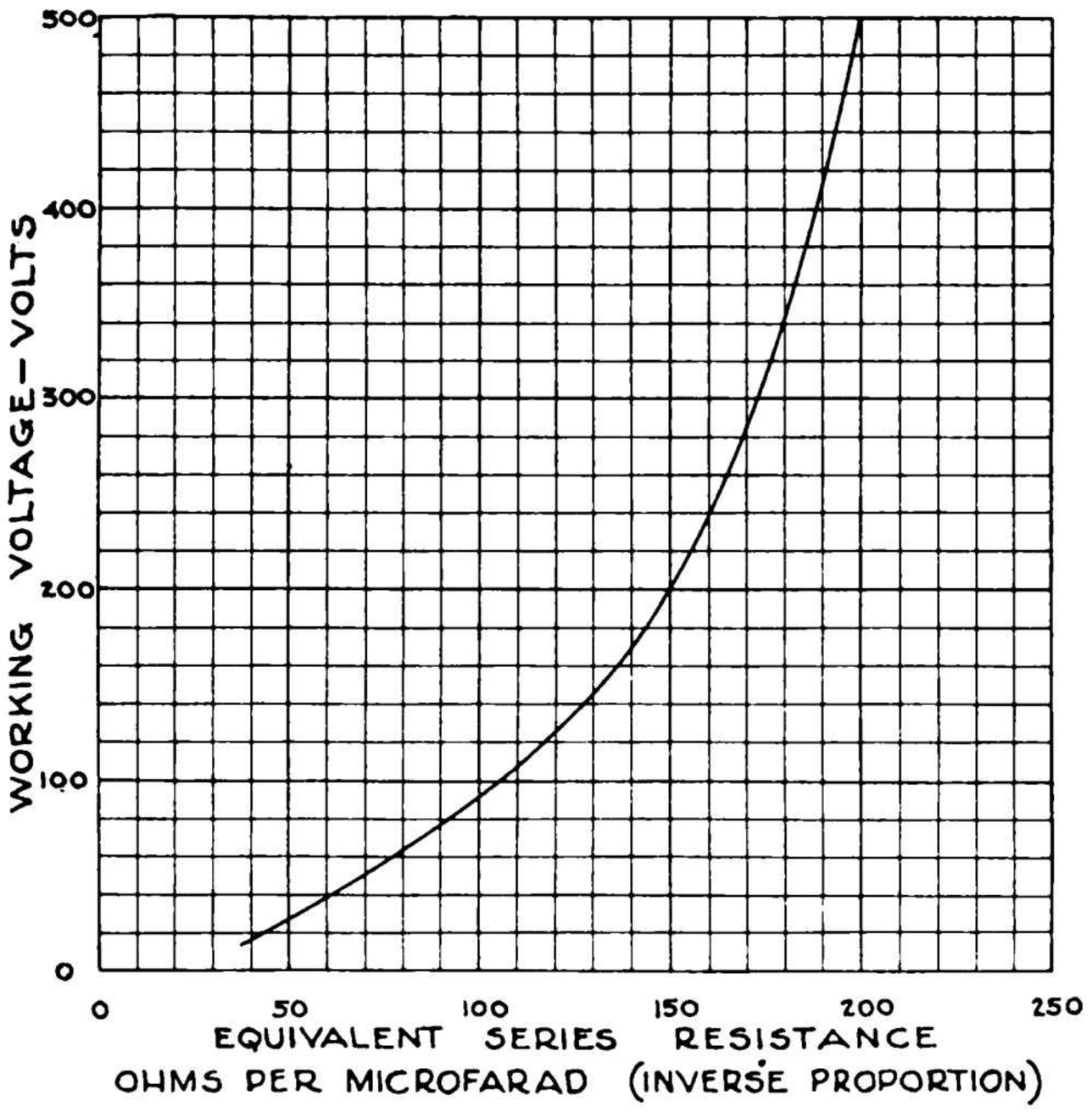

In this illustration the equivalent series resistance is shown as an inverse relationship. That is, equivalent series resistance decreases in direct proportion to in-

Digitized by Google Original from UNIVERSITY OF MICHIGAN

creases in capacity. Actual equivalent series resistance values for a given capacity are determined as follows:

$$\text{Equivalent Series Resistance} = \frac{\text{Equivalent Series Res. per mfd.}}{\text{Capacity in mfds.}}$$

Effect of Separator on Equivalent Series Resistance

The thickness of separator and the type of separator material employed will also determine, to a considerable degree, the total equivalent series resistance of a given capacitor structure. An increase in separator thickness obviously lengthens the resistive path between foil surfaces and a reduction in the penetrability of the separator material, for a particular electrolyte, increases the total resistive path.

Radio Frequency Characteristics

As a general rule, dry electrolytic capacitors possess very poor radio frequency characteristics as compared to other types of capacitors. For example: a dry electrolytic capacitor of 10 microfarads capacity may show an effective capacity of as low as 0.5 microfarads at frequencies of from 500 kilocycles to 10 megacycles.

It is interesting to note however, that the physical relationship of anode and cathode foils and their connecting tabs, influence the radio frequency characteristics of dry electrolytic capacitors more than factors such as electrolyte conductivity, as might be normally expected. To illustrate this observed characteristic, reference is made to the following figures, which show

Digitized by Google Original from UNIVERSITY OF MICHIGAN

the effect of relative positions of foils and their connecting tabs:

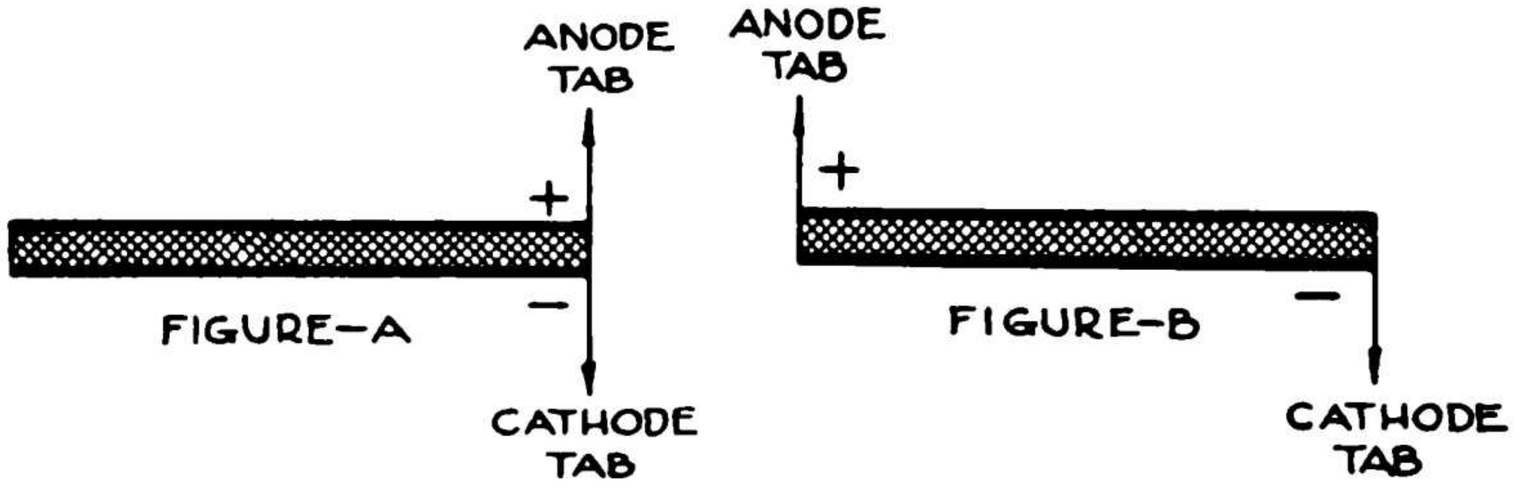

With a given capacity, of a given voltage structure, the construction shown in figure *A* will show a radio frequency impedance of as low a value as one-twentieth of that obtained with the construction shown in figure *B*.

In multiple wound capacitors this relationship is still more pronounced but can be offset by bringing out a tab from each end of the cathode foil. See figures *C* and *D*.

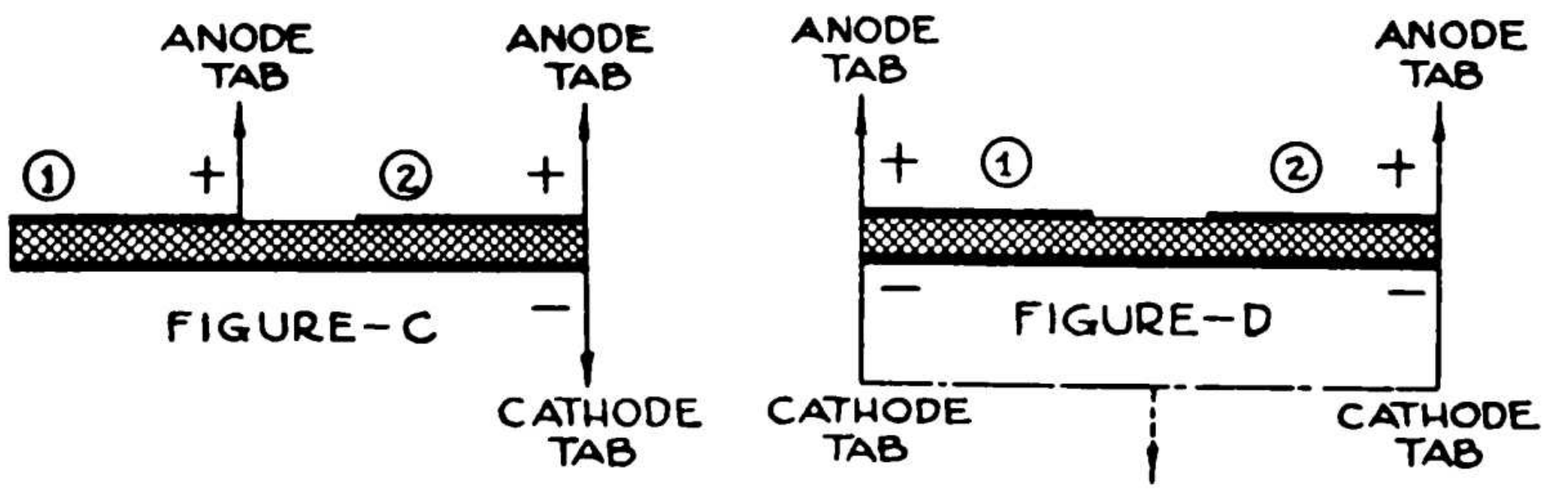

In figure C the first anode (or section) will have an impedance from ten to twenty times greater than that of the second anode. This can be offset by using the construction in figure *D*.

It has been observed that the ratio of difference in radio frequency impedance between anodes 1 and 2, of

Digitized by Google Original from UNIVERSITY OF MICHIGAN

figure C, is determined to a large extent by the physical length of anode foil number 2. It has been further observed that the ratio of difference is greater, the higher the frequency.

From the above observed phenomena it is reasonably safe to assume that only a small percentage of the anode and cathode foil surfaces, immediately adjacent to the tab connections, is actually effective at radio frequencies. The reason for this would seem to be that the inductive reactance of the foils themselves, at radio frequencies, tends to cancel out a large portion of the capacitative reactance.

It seems doubtful too, that the electrolyte is a conductive medium at radio frequencies as conduction through the electrolyte is primarily by ionization and it is very difficult to picture electrolyte ions moving at the speeds corresponding to frequencies of for example, 500 kilocycles to 10 or 20 megacycles.

It would therefore seem more logical to consider that electrolytes are insulating mediums at radio frequencies. Under such an assumption, the capacity of a dry electrolytic capacitor, at radio frequencies, would be purely electrostatic, with the electrolyte and anodic film constituting the effective dielectric medium.

Whatever the actual effect, it has been further observed that the employment of wider foils decreases the impedance of a given capacitor structure and still more interesting is the fact that a given capacitor structure exhibits very little change in impedance over a wide band of frequencies, generally changing less than ten per cent from 500 kilocycles to 20 megacycles.

Digitized by Google Original from UNIVERSITY OF MICHIGAN

Idle Shelf Life and Leakage Recovery Characteristics

Dry electrolytic capacitors when they have been on idle shelf life for long periods of time show apparent reductions in the effectiveness of the dielectric film in that direct current leakage values increase. This effect is not, however, so marked as is the case with wet electrolytic capacitor structures.

The condition of increased leakage current values is self remedying when rated working voltages are applied to the capacitor until leakage current values are reduced to normal levels. The time required to accomplish this leakage current reduction to normal values is called the leakage recovery time. Leakage recovery time is determined to a considerable degree, by such factors as voltage rating, electrolyte conductivity and purity of anode foil.

Typical leakage recovery characteristics of dry electrolytic capacitors are shown in the following graphic illustration:

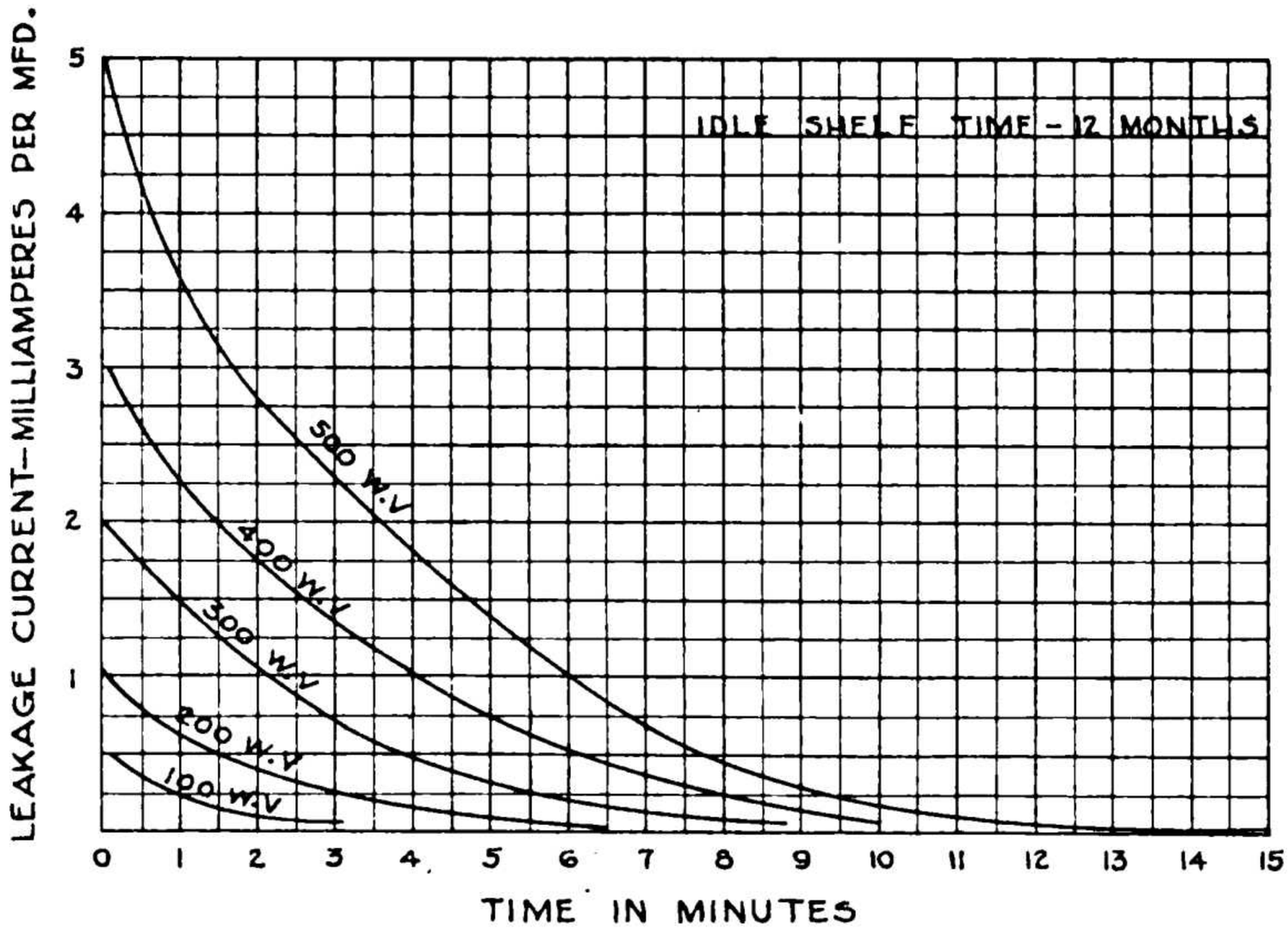

Digitized by Google Original from UNIVERSITY OF MICHIGAN

In ascertaining leakage recovery characteristics as shown in the illustration on page 176, it is customary to use a circuit diagram such as the following:

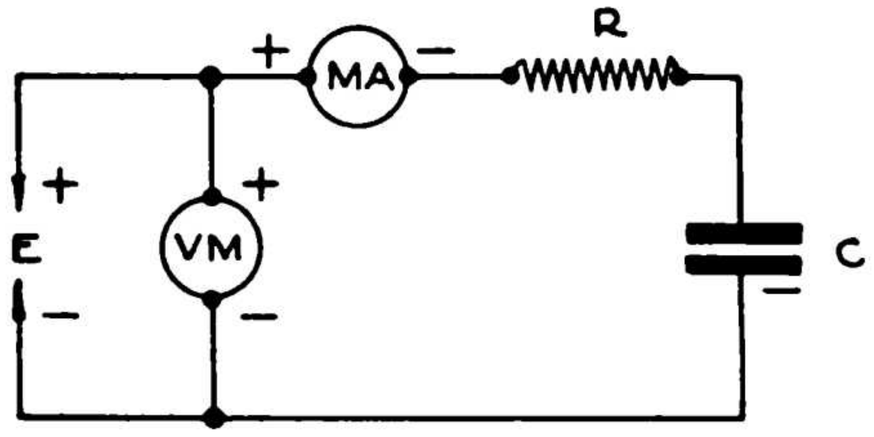

Where

E=Rated working voltage
MA=Milliammeter
VM=Voltmeter
C=Capacitor
R=Resistor

Also where

$$R=\frac{20{,}000}{C}$$

R=resistance in ohms
C=capacity in microfarads

Active Life Characteristics

Assuming that there are no impurities present in a dry electrolytic capacitor structure to reduce the normal active life expectancy by introducing resultant corrosion, the main determining factor of useful life is the rate of moisture loss from the electrolyte. A loss of moisture results in an increase in the specific resistivity of the electrolyte and this is reflected in an increase in equivalent series resistance and a reduction in effective capacity. Leakage current is also reduced due to the decrease in ion concentration of the electrolyte but this in itself is of no importance.

Digitized by Google Original from UNIVERSITY OF MICHIGAN

The loss of moisture is from two causes; one being that small amount used for anodic film maintenance and the other, that lost by evaporation. Moisture lost by evaporation depends, in turn, on container construction and operating temperature conditions. Hermetically sealed, metallic containers would naturally offer a longer life expectancy than less effectively sealed containers of cardboard. An increase in operating ambient temperature would reduce the life expectancy as the rate of moisture loss would vary with change in temperature. For obvious reasons therefore, hermetically sealed containers are preferred where operating ambient temperatures are relatively high. Temperatures in excess of 40° Centigrade are not generally satisfactory as operating ambients.

To illustrate the active life characteristics of dry electrolytic capacitors, the following graphic figure is referred to.

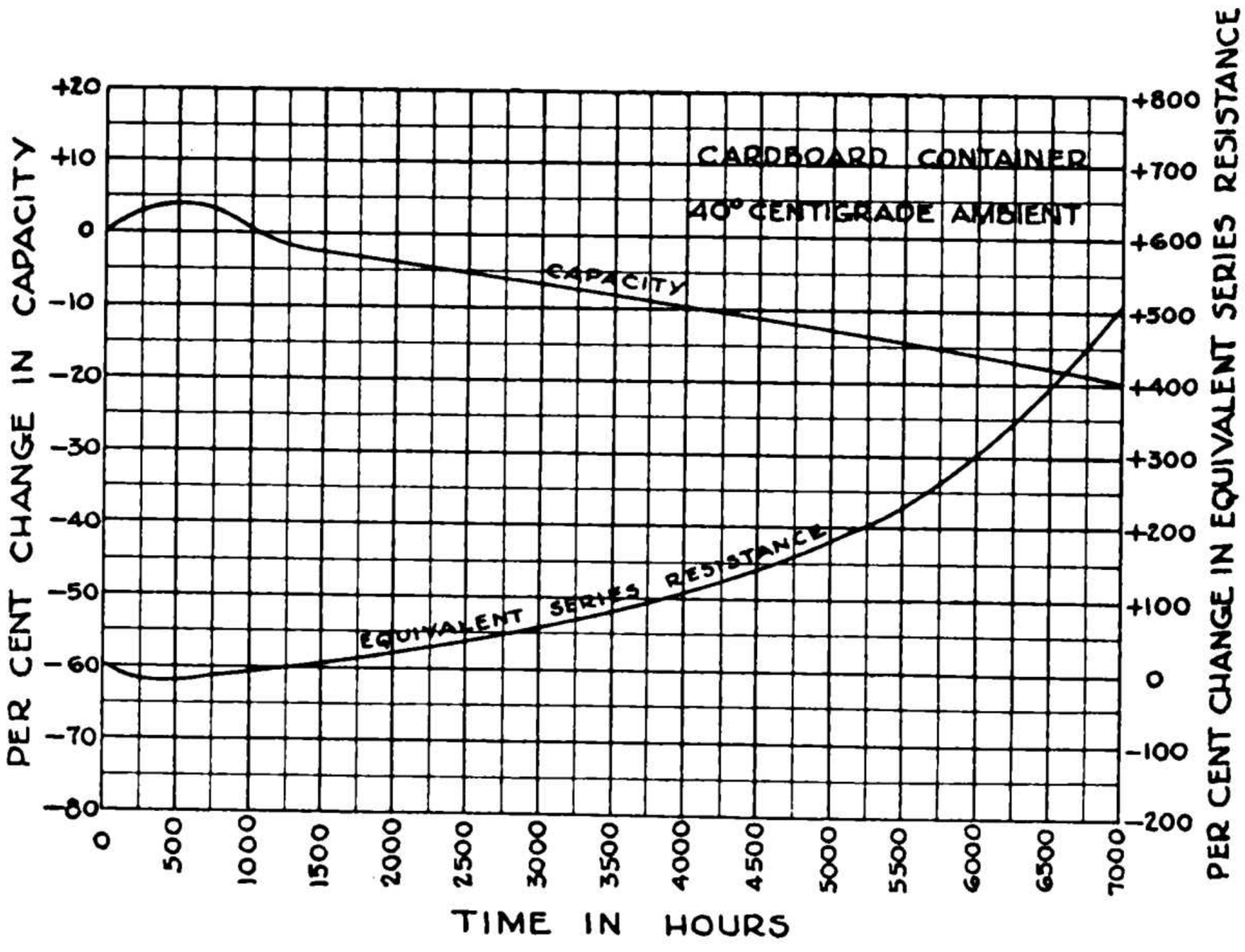

Digitized by Google Original from UNIVERSITY OF MICHIGAN

From this illustration it can be seen that a material increase in equivalent series resistance and reduction in effective capacity results from the operation of a dry electrolytic capacitor in an ambient temperature of 40° Centigrade, especially where the capacitor is housed in a relatively ineffectively sealed cardboard container. In comparison to these results, the following illustration shows the effects of operation at a room ambient or temperature of 20° Centigrade. In both cases, a 5 per cent alternating current potential component is applied in addition to rated value of direct current potential.

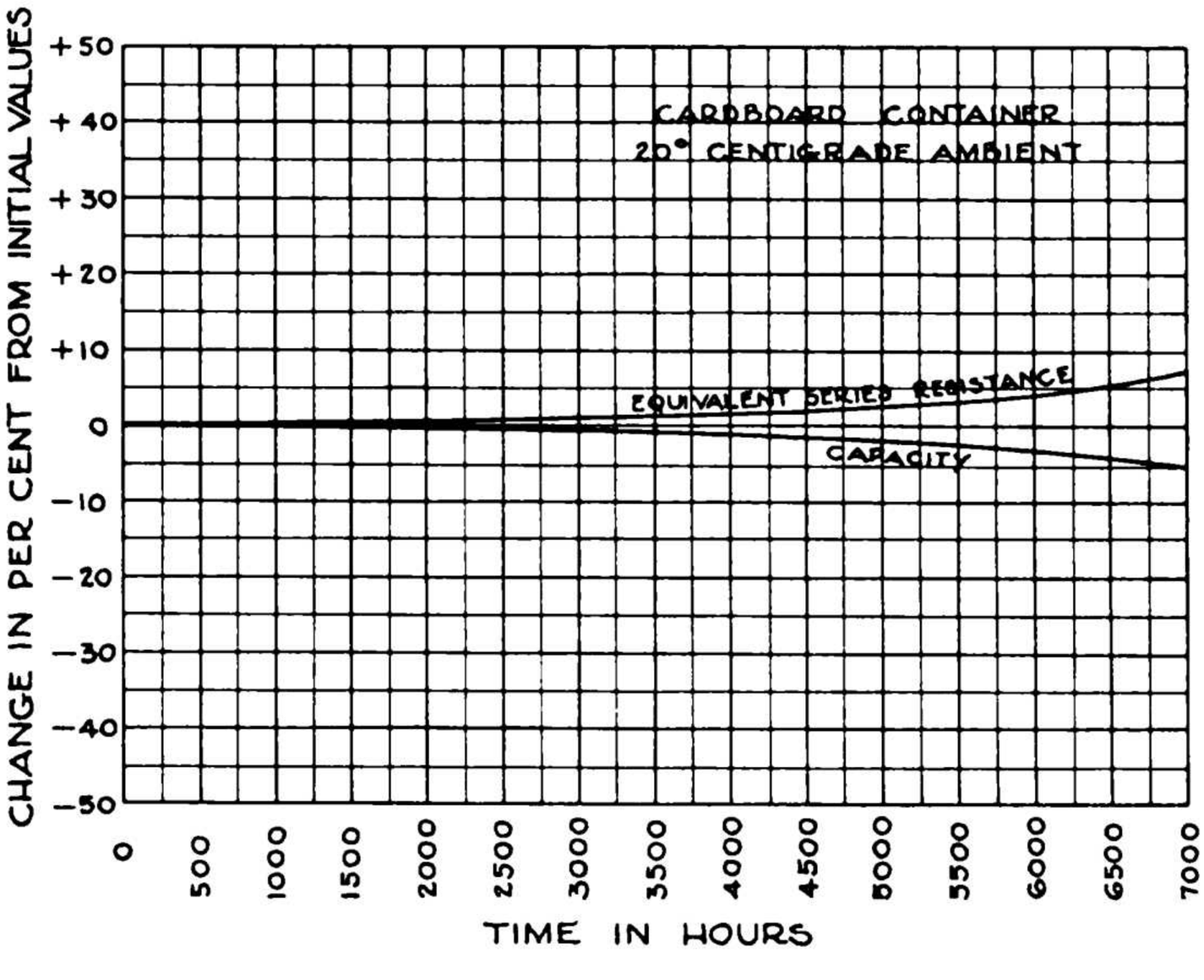

Over Voltage Breakdown

Previous mention has been made of the various factors which determine the breakdown potential of the dielectric film. It has also been mentioned that whereas a wet electrolytic capacitor may suffer no per-

Digitized by Google Original from UNIVERSITY OF MICHIGAN

manent injury if actual scintillation occurs, a dry electrolytic capacitor may be permanently short-circuited under similar conditions. A description of the actual breakdown phenomenon, as applied to dry electrolytic structures, follows in detail.

When potentials, in excess of the formation voltage of the anodic film, are applied to a dry electrolytic capacitor, there is not a uniform increase in leakage current concentration over the surface of the anode foil. In fact the leakage current tends to concentrate at certain minute areas. Such concentrations of leakage current may be caused by one or more of a number of factors. For example: such as conducting particles, in the separator medium or electrolyte, which may lie in close proximity to the anodic film and possess high values of emissivity, or the presence of minute foreign particles on the anode surface which prevent a continuity of dielectric film structure, or actual minute breaks in the film, or highly conductive spots in the electrolyte due to small areas where excess water is present.

Whatever the cause, such leakage current concentrations result in the generation of hydrogen and oxygen, by electrolysis, at the cathode and anode foils respectively, and if the separator medium is not impermeable to the passage of these gases, small pockets of the highly explosive mixture of hydrogen and oxygen will be formed.

The increased current concentration is of such magnitude that a material rise in temperature occurs at the point of current concentration which in turn lowers the work function for emission from the ions of the

Digitized by Google Original from UNIVERSITY OF MICHIGAN

electrolyte still further until the dielectric actually ruptures and a spark occurs. This spark ignites the small pocket of the explosive mixture of gases and a miniature explosion occurs. As a general rule, this explosion is of sufficient force to disrupt either the anode or cathode foils and form small crater-like holes, the projections of which are forced through the separator material causing actual electrical and mechanical contact between anode and cathode foils.

Obviously, dry electrolytic capacitors may be constructed to withstand extremely high values of over voltage if the separator medium employed is completely impermeable to the passage of the hydrogen and oxygen gases so that no explosive mixtures can accumulate. This factor is chiefly responsible for the frequent employment of regenerated cellulose, such as cellophane, for one of the separator materials. For the same reason, highly dense cellulose or paper is also frequently used.

This phenomenon of high voltage breakdown is, of course, confined to those voltage ranges wherein field strengths are sufficiently great to cause sparking or scintillation.

The use of more or less gas tight separator materials in no way minimizes the importance of preventing high leakage current concentration areas from occurring by the employment of proper design factors.

Aging of Dry Electrolytic Capacitors

Theoretically at least, the formation of the anodic film may be carried to a point of negligible leakage cur-

Digitized by Google Original from UNIVERSITY OF MICHIGAN

rent at any specific voltage. A capacitor constructed of anode foil, filmed to such a low value of leakage current, would require no further application of voltage. In actual practice though, the anode foil must be handled during such mechanical operations as winding, cutting and folding tabs, impregnation and assembly into containers. Such handling causes breakage of the anodic film and the exposure of raw unfilmed surfaces to the electrolyte. This necessitates, as a general procedure, the application of voltage to completed capacitors to repair or reform the anodic film. Such a secondary application of potential is termed aging.

In aging operations, full rated voltage is applied until leakage current values are decreased to desired orders of magnitude. As a rule too, voltage is applied through a resistance which is of such a value that the current is limited to a point where excess heating of the winding might occur. Thus, in actuality, the terminal voltage across the capacitor is automatically adjusted to a certain limited current until desired values of both voltage and leakage current are reached.

For such aging operations, the circuit network on page 183 is usually employed.

The lamp *L* serves to indicate short circuited capacitors or capacitors which draw an excessive amount of current.

The single circuit jack *J* affords a means of inserting a milliammeter into the circuit for the purpose of measuring values of leakage current.

The length of time required for the aging operation is determined by such factors as completeness of original anodic film formation, amount of film damage

Digitized by Google Original from UNIVERSITY OF MICHIGAN

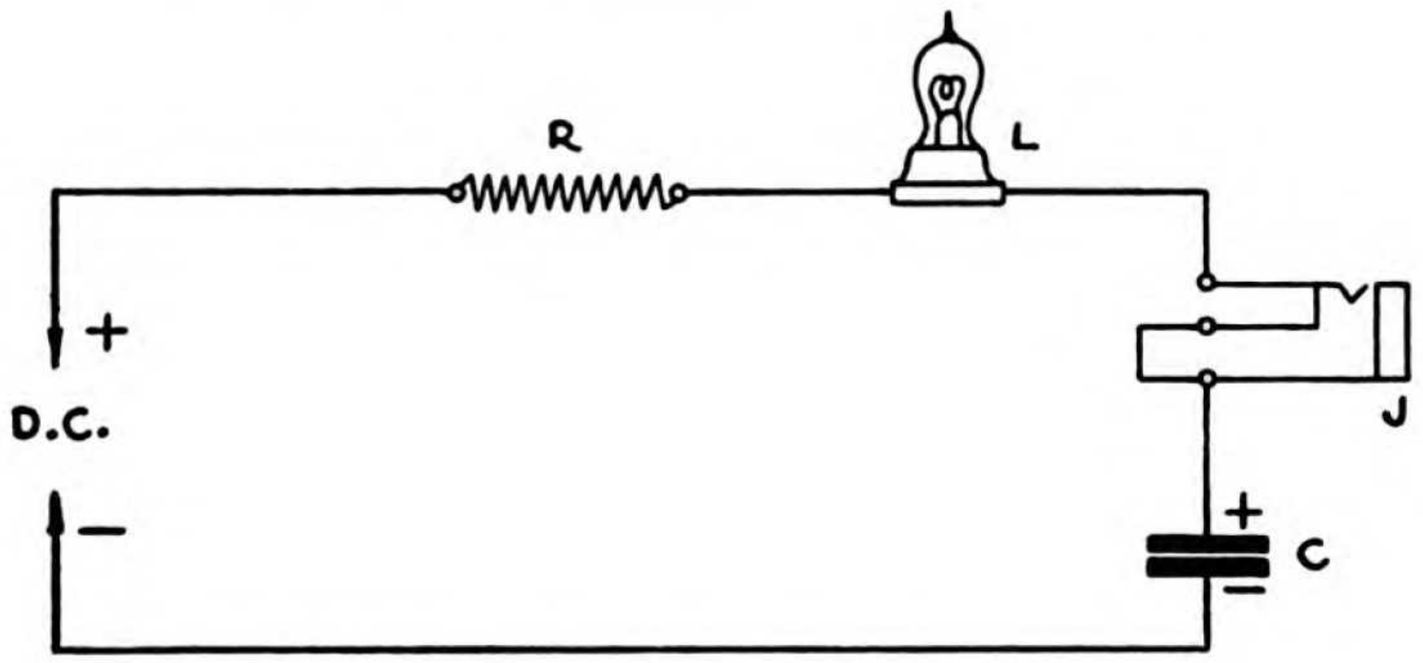

R=8000 OHM RESISTOR
L=10 WATT 110 VOLT INCANDESCENT LAMP
J=SINGLE CIRCUIT JACK
C=CAPACITOR

during processing of capacitors, purity of aluminum in anode foil, type of electrolyte employed and the voltage rating of the capacitor.

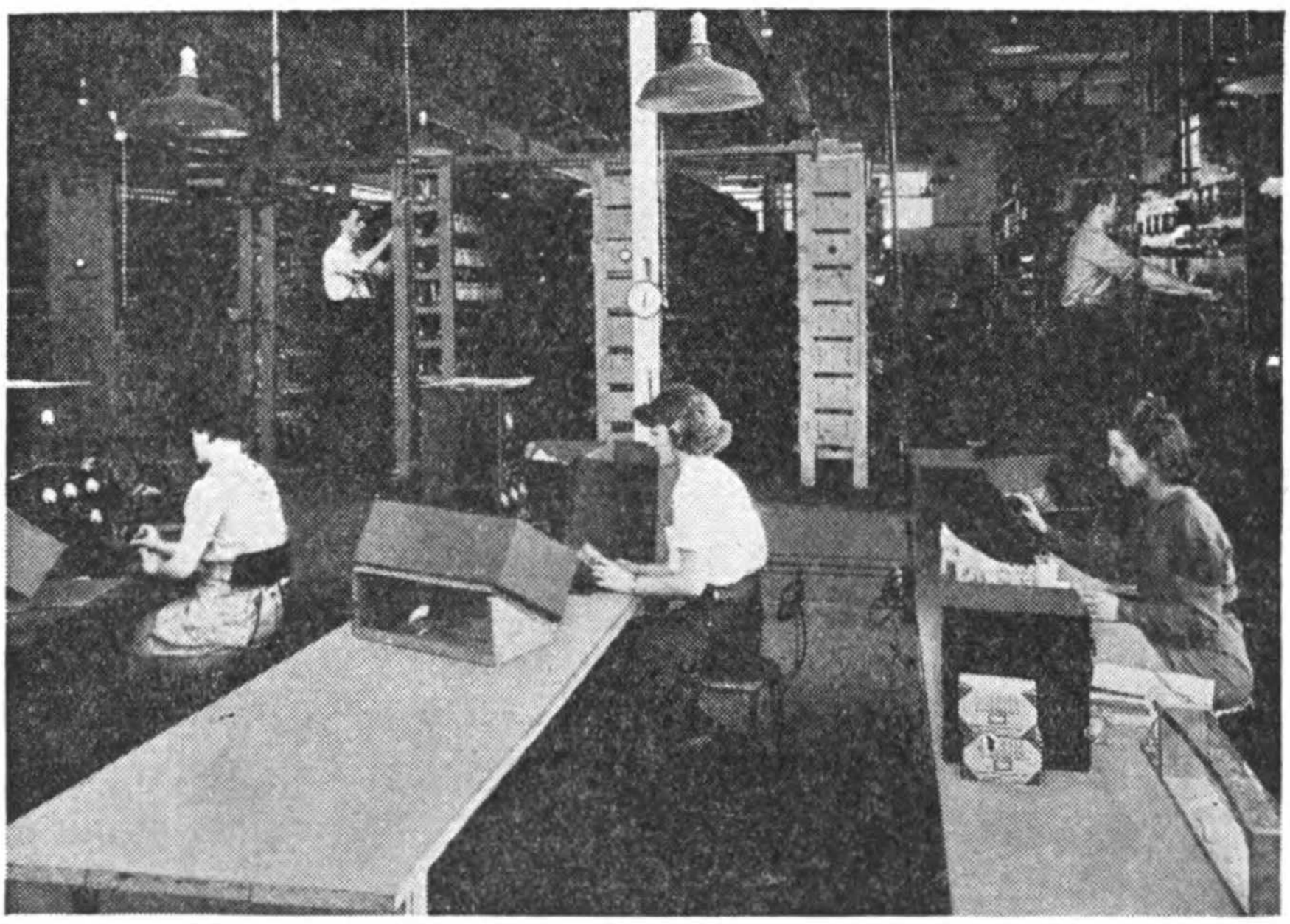

(Courtesy Cornell-Dubilier Electric Corp.)

Aging and testing of dry electrolytic capacitors.

Digitized by Google Original from UNIVERSITY OF MICHIGAN

Chapter XIV

TESTING OF ELECTROLYTIC CAPACITORS

THIS chapter is devoted to the testing of all types of electrolytic capacitors except the non-polarized or alternating current type and the test procedures shown will apply equally to wet and dry electrolytic structures.

The alternating current type of dry electrolytic capacitor will be treated in a separate chapter under that heading.

Most of the test procedure shown in this chapter will be based on the assumption that the equivalent network of a dry electrolytic capacitor is a capacity in series with a resistance.

In testing wet electrolytic capacitors, there are five determinations to be made. These are direct current leakage, capacity, equivalent series resistance, scintillation voltage and recovery leakage current time. Also, in the case of regulating types of capacitors, the degree of regulation.

In testing dry electrolytic capacitors, the determinations are the same, with the exception that scintillation voltages are not determined as this would obviously represent the breakdown voltages of the structures.

Before proceeding with actual test procedures it might well be in order to review some of the fundamental relationships existing in a network, composed of a capacity C in series with a resistance R:

Digitized by Google Original from UNIVERSITY OF MICHIGAN

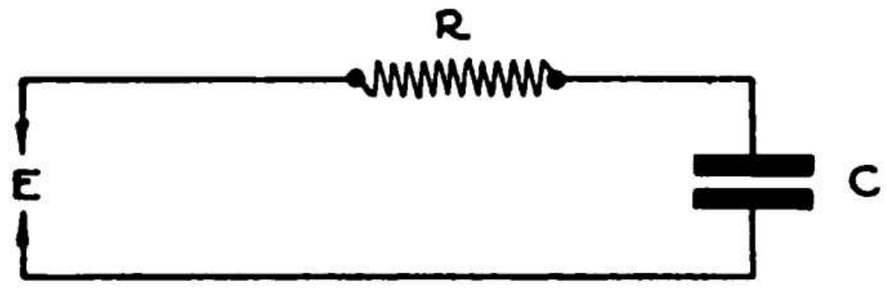

The current relationship in such a network is

$$I = \frac{E}{Z}$$

Where I=effective current in amperes
E=effective potential in volts
Z=impedance in ohms

$$Z = \sqrt{R^2 + \left(\frac{1}{2\ \pi\ f\ C}\right)^2}$$

Where R=Series resistance in ohms
C=Capacity in farads
f=frequency
π=3.1416

Therefore

$$I = \frac{E}{\sqrt{R^2 + \left(\frac{1}{2\ \pi\ f\ C}\right)^2}}$$

The expression $\left(\frac{1}{2\ \pi\ f\ C}\right)$ is the capacitive reactance at frequency f and is indicated as X_c.

It can be seen from the above relations that the values of resistance and reactance are in series but add vectorially. A corresponding vector diagram of a resistance in series with a capacity is represented by the following impedance triangles:

Digitized by Google Original from UNIVERSITY OF MICHIGAN

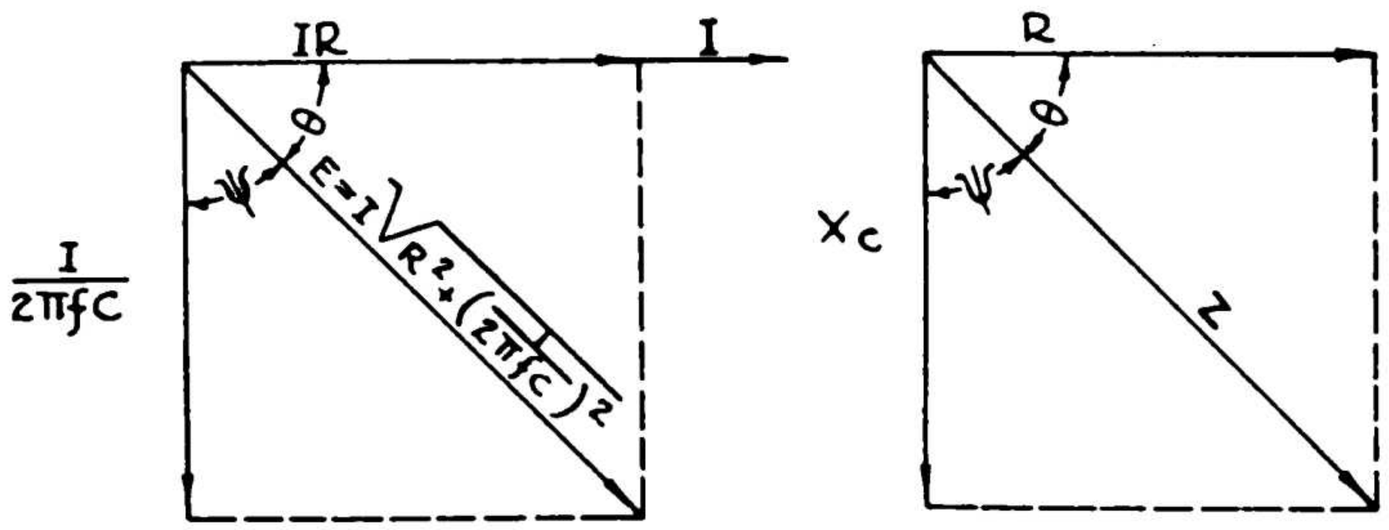

In the consideration of a perfect capacitor, without series resistance, the current is in advance of the potential by 90°. Such a capacitor cannot be realized in practice and this is particularly true in regards to electrolytic capacitor structures. A capacitor therefore will show a phase angle of less than 90°. Such a capacitor will absorb power and if the departure from the 90° phase angle is considerable the power loss may be of large magnitude.

The angle by which the current leads the potential is termed the phase angle and indicated by the symbol θ. The phase angle is given by the expression

$$\tan \theta = \frac{1}{2 \pi f C R}$$

The power supplied to and dissipated in a series network is

$$P = EI \cos \theta$$

From this it is seen that the average power dissipated is given by the product of the in-phase component of the current and the potential. The quantity $\cos \theta$ is called the power factor.

Frequently, the term phase difference is used to denote the difference between the actual phase angle of a capacitor and the ideal 90° angle.

Digitized by Google Original from UNIVERSITY OF MICHIGAN

Thus, the phase difference ψ is

$$\psi = 90^\circ - \theta$$

By trigonometry

$$\sin \psi = \sin (90^\circ - \theta) = \cos \theta$$

Hence sin ψ = power factor

Also $\tan \psi = \cot \theta = 2 \pi f C R$

As power factor equals sin ψ the power factor is, by the same token, equal to the resistance divided by the impedance.

The tangent of the phase difference is equal to the resistance divided by the capacitive reactance.

If the series resistance is of a small order then the impedance approaches the capacitive reactance in value and the phase difference approaches zero.

As the sine and tangent of small angles are equal, it is sometimes convenient to consider that the power factor equals $2\pi f R C$. In the measurement of power factor of electrolytic capacitors it has therefore become more or less common practice to determine the equivalent series resistance and then solve for power factor by

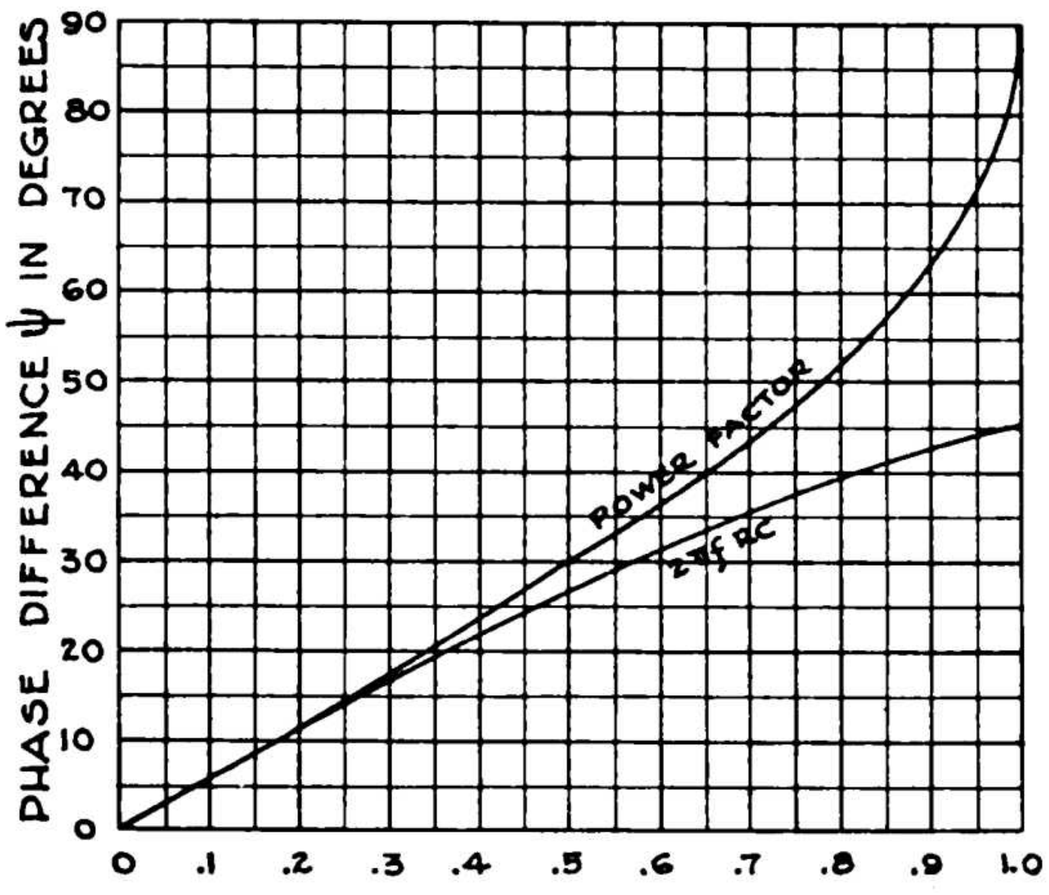

Digitized by Google Original from UNIVERSITY OF MICHIGAN

the use of the relation P.F.$=2\pi f\ R\ C$. To illustrate however, the inaccuracy of such a determination, reference is made to the preceding illustration which shows the relation between the sine and tangent functions:

Where

$$\text{Power Factor} = \sin\ \psi\ = \frac{R}{Z}$$

$$2\ \pi\ \text{f R C} = \tan\ \psi = \frac{R}{X_c}$$

Measurement of Direct Current Leakage

In the measurement of direct current leakage of an electrolytic capacitor, the procedure will have to be varied slightly in accordance with the time which may have elapsed since the capacitor last had voltage applied to it. If the time elapsed is small, rated voltage may be applied to the capacitor and the direct current leakage measured immediately. If this is not the case, and it generally is not, rated voltage is applied to the capacitor for a certain period of time and at the end of this aging period the leakage current is measured. This aging period is necessary in order that the leakage current may reach a nominal steady state value. The time required for this aging period cannot be set up very well in equation form as it depends on such factors as total idle shelf time, capacity, voltage rating and type of electrolyte employed. As a general rule however, it is customary to allow an aging time of approximately one minute for each 500 hours lapsed time since the last application of voltage.

Digitized by Google Original from UNIVERSITY OF MICHIGAN

The actual measurement of leakage current is accomplished by applying rated voltage across the terminals of the capacitor, in series with a milliammeter. A typical circuit diagram follows:

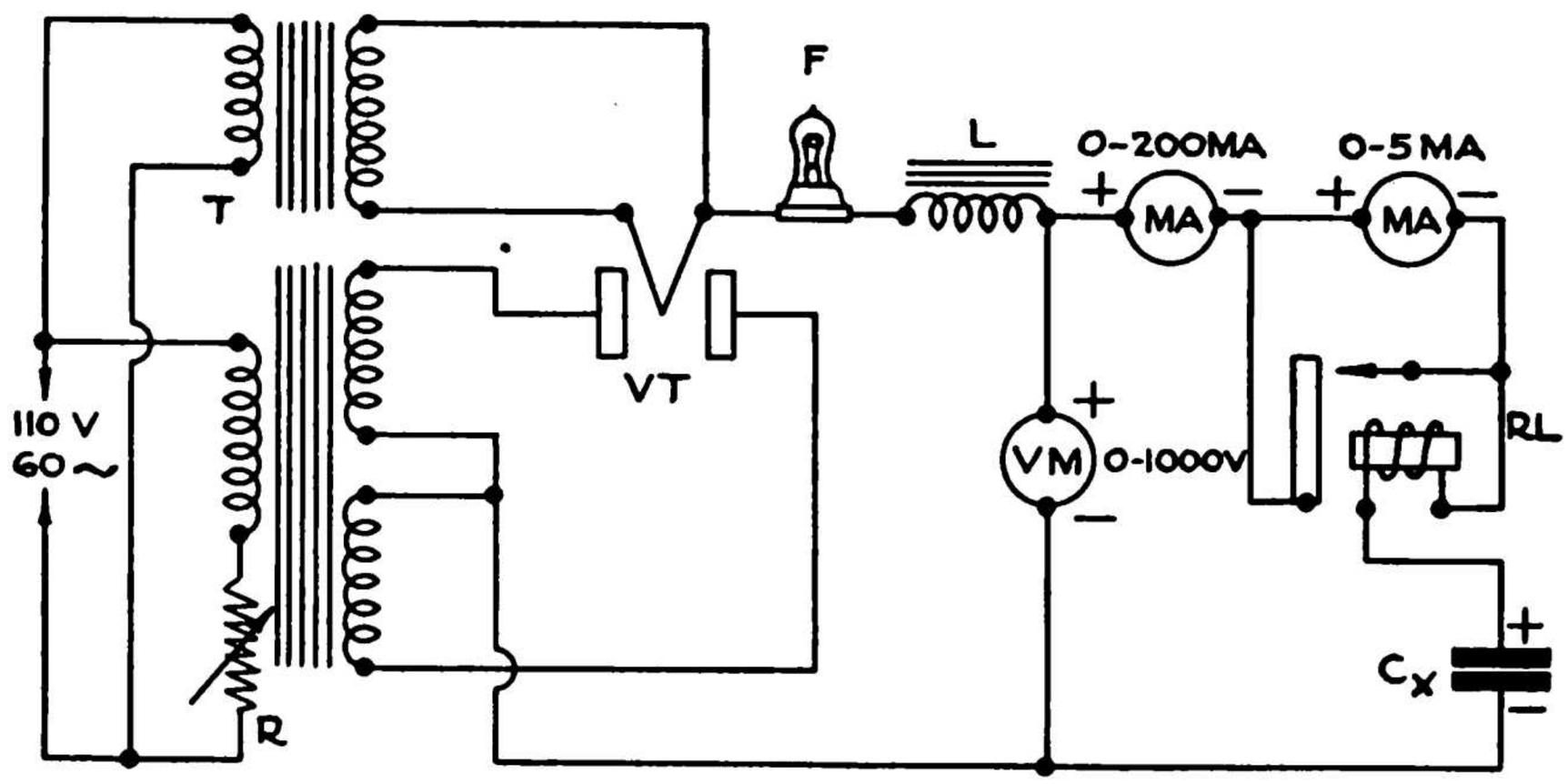

Legend:

T=Power transformer
R=Variable Resistor
VT=Rectifier Tube
F=Small pilot light or flash light bulb (0.15 ampere)
L=5 Henry choke coil (200 milliampere)
VM=0-1000 volts—D.C. voltmeter
MA=0-200 milliampere—D.C. milliammeter
MA=0-5 milliampere—D.C. milliammeter
RL=Sensitive relay
C*x*=Capacitor under test

This circuit diagram is more or less self explanatory but the following features offer many advantages.

R is a variable resistor used to adjust voltages to desired values.

F is a small flash light bulb used as a protective fuse in case of a short circuit at higher voltages.

Digitized by Google Original from UNIVERSITY OF MICHIGAN

RL is a sensitive relay so adjusted that a leakage current of 5 milliamperes or more will automatically short circuit the low range instrument and protect it until leakage current values have decreased to less than 5 milliamperes. Thus both high and low values of leakage current may be observed without the necessity of any switching arrangement manually operated.

This same arrangement can be readily utilized for also measuring initial leakage current and regulating leakage current values.

Regulation

In testing regulating types of electrolytic capacitors, the regulation is measured by increasing the potential across the capacitor in increments until the leakage current reaches a predetermined value, usually between the range of from 15 to 50 milliamperes depending upon the voltage and capacity rating of the capacitor. For satisfactory regulation, these leakage current values should be reached at potentials of 60 to 75 volts or less, in excess of the rated working voltage of the capacitor.

Leakage Recovery

The leakage recovery time and the maximum instantaneous value of leakage current are relatively important factors which are frequently overlooked. The actual importance of these factors is related to specific circuit requirements and limitations. Where electrolytic capacitors are used in filter networks, it is very

Digitized by Google Original from UNIVERSITY OF MICHIGAN

important that initial or instantaneous values of leakage current do not exceed the maximum current rating of the rectifier tube used or this tube may be destroyed. It is equally important that leakage recovery time is not excessive or both power transformers and rectifier tubes may be overloaded for sufficient time to cause undue heating and even damage.

Leakage recovery time is measured by applying a potential equal to the rated working voltage and observing the time required for the leakage current to reach a nominal value. In making such a measurement it is general practice to connect a 500 ohm resistance in series with the capacitor being measured. This, however, would not be necessary with the type test circuit already described.

Instantaneous values of leakage current are also determined by applying the full rated working voltage to the capacitor and observing the leakage current. It is general practice to observe the value of leakage current at the end of from 3 to 5 seconds from the time potential is applied. At the end of such a period, the total leakage current should not exceed the maximum value permitted for any specific circuit requirement.

Scintillating Voltage Measurement

This measurement applies only to the wet type of electrolytic capacitor unless of course it is desired to determine the breakdown voltage of a dry electrolytic structure.

The scintillation potential is measured audibly with the ear placed from one to two inches from the

Digitized by Google Original from UNIVERSITY OF MICHIGAN

capacitor while the applied potential is increased in increments until sparking becomes audible. The potential at which the first faint sparking or frying noise becomes audible is termed the scintillation voltage. This is, obviously, not a very exact test procedure but unfortunately it is the only practical one so far devised. The procedure might be elaborated on by the employment of a stethoscope or other means of a similar nature but a slightly deaf individual would even then observe a relatively higher value of scintillating voltage than normal.

Measurement of Capacity and Equivalent Series Resistance

Capacity determinations are made by the employment of two general methods; namely, the direct impedance method and the impedance bridge method.

In the employment of the direct impedance method, an alternating current of known potential and frequency is applied to the capacitor and the current determined. From these values the capacity is calculated. For illustration the following circuit diagram is referred to:

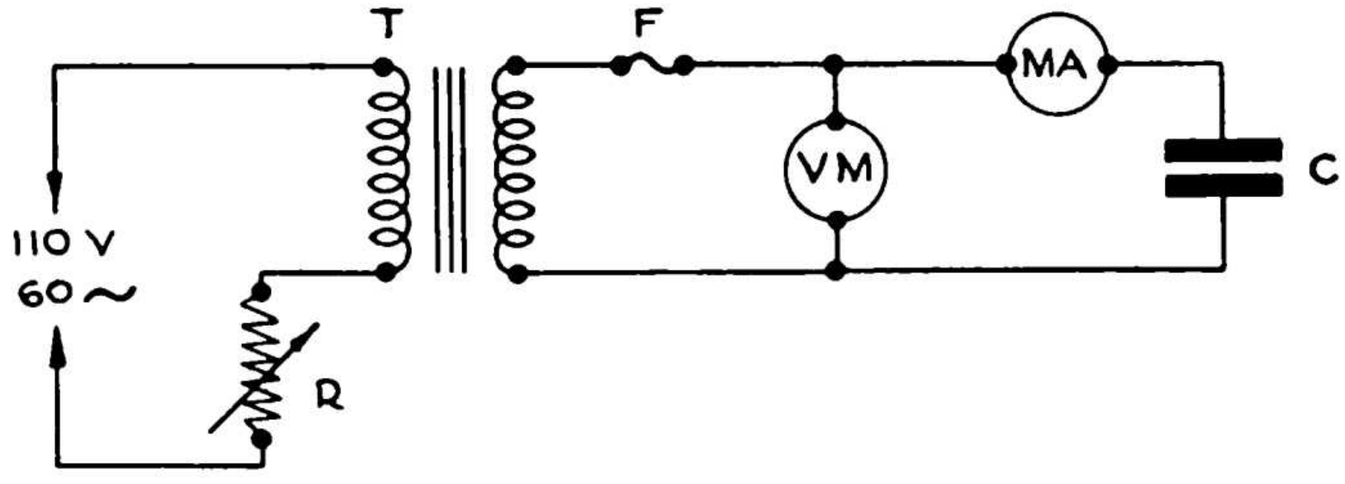

Digitized by Google Original from UNIVERSITY OF MICHIGAN

Legend:

T—Power transformer
R—Variable resistor
F—Protective fuse
VM—A.C. Voltmeter
MA—A.C. Milliammeter
C—Capacitor under test

Since $I = \frac{E}{Z}$

$$\text{And } I = \frac{E}{\sqrt{R^2 + \left(\frac{1}{2\pi f C}\right)^2}}$$

$$\text{And } \sqrt{R^2 + \left(\frac{1}{2\pi f C}\right)^2} = \frac{E}{I}$$

$$\text{Therefore } C = \frac{10^6}{2\pi f \sqrt{\left(\frac{E}{I}\right)^2 - R^2}}$$

Where C is in microfarads.

Unfortunately the value of R (the equivalent series resistance) is not known and unless it is, an accurate determination of capacity cannot be made on such a basis. If, on the other hand, it is assumed that the value of R is negligible, then the impedance Z is approximately equal to the capacitative reactance X_c. Under such an assumption the determination of C becomes more simplified.

$$X_c = \frac{E}{I}$$

Digitized by Google Original from UNIVERSITY OF MICHIGAN

$$\text{and} \quad \frac{1}{2\pi f C} = \frac{E}{I}$$

$$\text{Therefore} \quad C = \frac{I \times 10^6}{2\pi f E}$$

Where C is in microfarads.

A distinct disadvantage to the employment of this method lies in the fact that pure alternating current is applied to the electrolytic capacitor and if the potential of this alternating current exceeds 3 or 4 volts there is the probability of forming an anodic film on the surface of the cathode foil. To avoid this taking place it is customary to apply a polarizing direct current potential to the capacitor while capacity measurements are being made. For illustration, reference is made to the following circuit diagram:

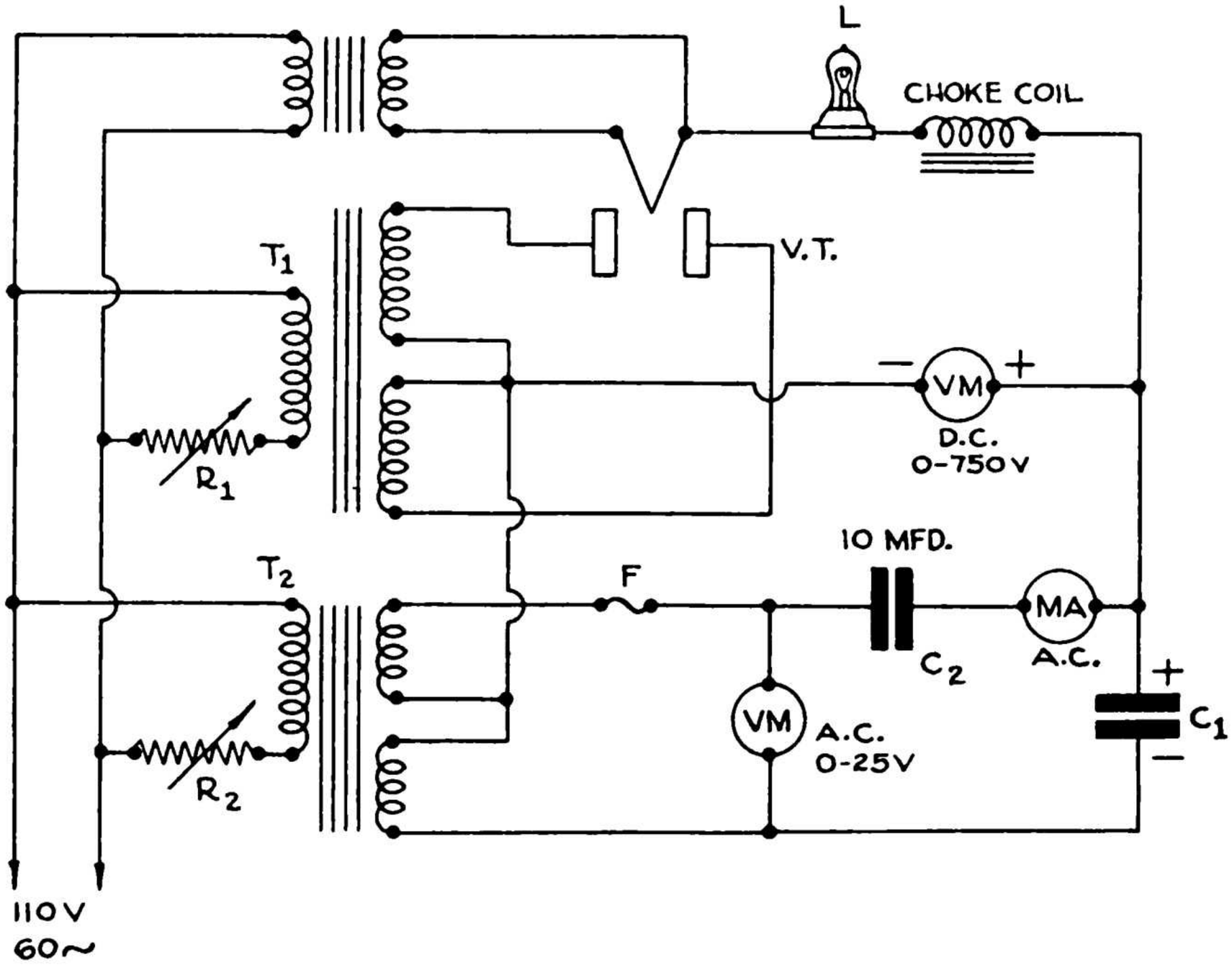

Digitized by Google Original from UNIVERSITY OF MICHIGAN

Legend:

T_1 · T_2 — Power Transformers
V.M. D.C. — Direct Current Voltmeter
V.M. A.C. — A. C. Voltmeter
M.A. A.C. — A. C. Milliammeter
C_1 — Electrolytic Capacitor under test
C_2 — Large Capacity (paper dielectric) Capacitor
R_1 · R_2 — Variable Resistances
F — Protective Fuse
L — Flash Light Bulb (used as high voltage fuse)
VT — Rectifier Tube

Examination of this circuit network discloses the fact that the direct current blocking capacitor C_2 is connected in series with the electrolytic capacitor C_1. Therefore an impedance measurement, as indicated by current and voltage readings taken from values indicated by the A. C. milliammeter and voltmeter, would give the resultant capacity of C_1 and C_2 in series. The equivalent network would be as follows, as far as the alternating current portion of the above circuit is concerned:

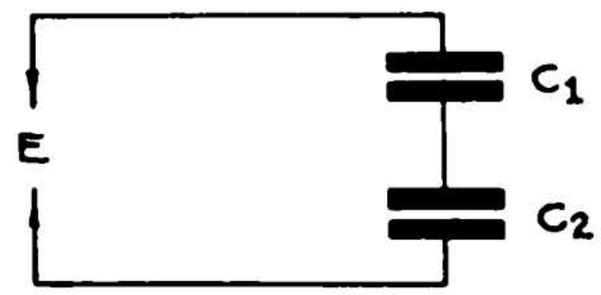

From this it can be seen that a different formula must be employed to determine the capacity of the electrolytic capacitor C_1.

$$\frac{1}{2\pi f\left(\frac{C_1\ C_2}{C_1 + C_2}\right)} = \frac{E}{I}$$

Digitized by Google Original from UNIVERSITY OF MICHIGAN

$$\text{Therefore } I = 2\pi f \left(\frac{C_1\ C_2}{C_1 + C_2}\right) E$$

$$\text{And} \quad C_1 = \frac{I\ C_2}{2\pi f E C_2 - I}$$

Where C_1 = Capacity in farads
C_2 = Capacity in farads
I = A.C. current in amperes
E = A.C. potential in volts

To facilitate more rapid determinations of capacity, it is generally customary to calibrate the A. C. milliammeter directly in microfarads, at some fixed value of A. C. voltage.

Under test, the electrolytic capacitor should always have applied to it, a direct current polarizing potential greater than the peak potential of the alternating current measuring voltage, in order that the cathode foil may never become positive with respect to the electrolyte.

The impedance bridge affords a more accurate method of determining the capacity of an electrolytic capacitor. It also affords the added advantage of making possible the determination of equivalent series resistance values at the same time.

In function, the impedance bridge is the same as the conventional Wheatstone bridge which is used for resistance determinations. Such a bridge network is shown in the following diagram.

The bridge network is said to be balanced when the various components are adjusted in such relationship to each other that zero potential appears at the point G. Such a zero potential indication is termed balance or null point.

Digitized by Google Original from UNIVERSITY OF MICHIGAN

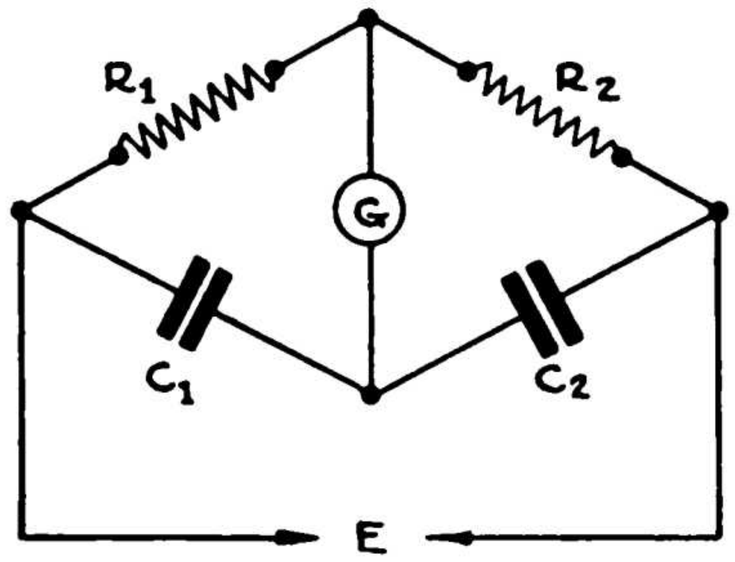

To satisfy the condition of zero potential at G the following mathematical relationships must exist between the components in the four branches or arms of the bridge network:

$$\frac{R_1}{R_2} = \frac{C_1}{C_2}$$

If R_1, R_2 and C_2 are known values then the value of C_1 may be determined from the following relationship:

$$\text{Where} \quad C_1 = \frac{R_1}{R_2} C_2$$

By the same token, if R_1 divided by R_2 is a fixed ratio or value, then values of C_1 can be determined directly in terms of the values of C_2 required to satisfy the conditions of balance.

In practical applications of the bridge network to the determination of capacity values, R_1 and R_2 may be fixed values of resistance and C_2 a calibrated decade capacitor or R_1 and C_2 may be fixed values of resistance and capacity respectively and R_2 a calibrated decade resistor. The use of the latter arrangement is generally found in practice. Before, however, going into a complete description of typical bridge networks, other factors must be considered.

Digitized by Google Original from UNIVERSITY OF MICHIGAN

Unless the capacitors indicated as C_1 and C_2 were true capacities, a complete balance of the bridge could not be had. Since very few capacitors meet the requirements of a true capacity, provisions must be made to balance also any resistive component. This is done by inserting a variable resistive element in series with the capacitor C_2, under the assumption of course that C_2 is, for all practical purposes, a perfect capacitor with a zero power factor. The bridge network then becomes as follows:

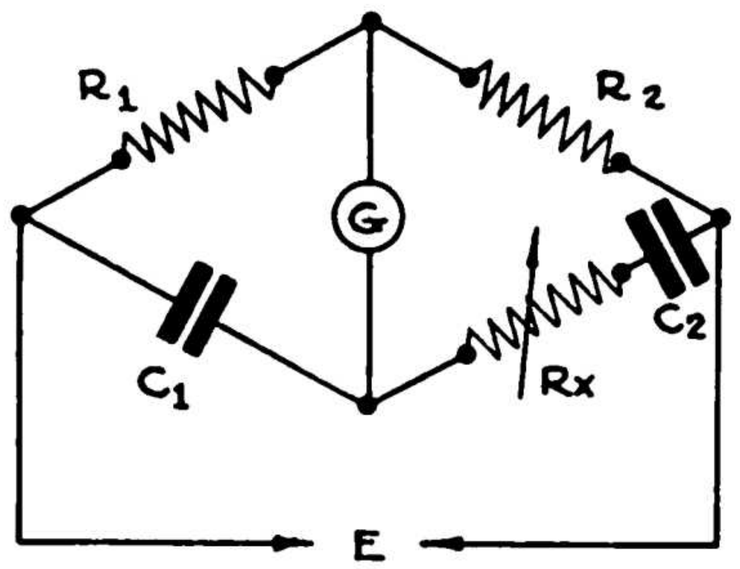

In this bridge network, the capacity and equivalent series resistance of C_1 may be determined in terms of C_2 and R_x if the bridge is adjusted to a null point indication at point G. If, when such a null point condition is obtained, R_1 and R_2 are of equal value, then C_1 will equal C_2 and R_x will equal the equivalent series resistance of C_1.

If R_1 and R_2 are not equal then C_1 will not be numerically equal to C_2 and a correction for the true value of R_x will have to be made by the following relationship:

$$R_c = \frac{C_2}{C_1} R_x$$

Digitized by Google Original from UNIVERSITY OF MICHIGAN

Where R_c is the corrected or true equivalent series resistance of C_1.

To state it more plainly, the equivalent series resistance cannot be directly determined in terms of R_x unless capacity is balanced against capacity and R_1 and R_2 are numerically equal to each other.

It has been previously mentioned that a direct current polarizing voltage should be applied to an electrolytic capacitor whenever an alternating current potential is applied for measurement purposes. This application of the direct current potential is accomplished in the following manner:

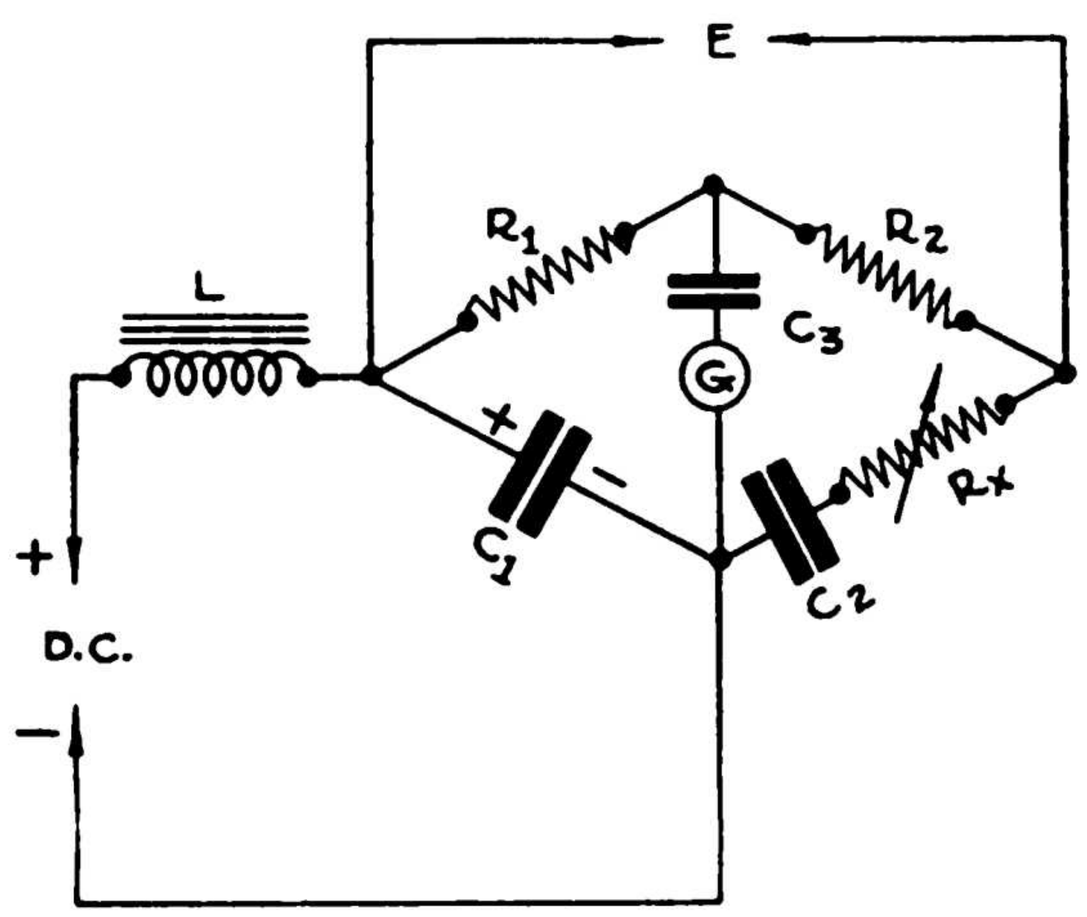

The choke coil L has been inserted into the network to prevent any alternating current from flowing through into the source of direct current.

It is necessary that the inductance of L be sufficiently great that the effective impedance thus placed in parallel with C_1 will be large enough not to change the effective impedance of C_1 more than a small fraction of

Digitized by Google Original from UNIVERSITY OF MICHIGAN

a per cent. As a rule the inductance of L is kept in the order of 500 henries or more.

Capacitor C_3 has been placed in series with the null indicator to prevent a flow of direct current through the resistive arm of the bridge R_1.

The most common form of null point indicator is a standard head set or ear phones such as are used in radio telegraphy. Other forms of null point indicators in frequent use are the vacuum tube voltmeter and the so-called "electric eye."

The most desirable arrangement of bridge circuits is one where R_1 and R_2 are fixed resistances of the order of 5000 ohms each, R_x is a decade resistance box of 1000 ohms resistance, arranged in steps of 0.1 ohm and C_2 is a standard decade capacitor of 50 microfarads capacity, arranged in steps of 0.1 microfarad. Such a decade capacitor is not only bulky but it would be extremely costly so the general practice is to use a fixed capacity standard as C_2 and have R_2 variable in value and calibrated to read directly the capacity of C_1.

The frequency of the applied or measuring alternating current may be any value desired but standard practice evolves the use of a frequency of 120 cycles although 60 cycles is also sometimes employed.

The following circuit diagram shows a typical bridge arrangement which can be employed for capacity, equivalent series resistance and direct current leakage measurements of electrolytic capacitors. Such a bridge may be used to measure the characteristics of wet and dry electrolytic capacitors rated from 1 to 20 microfarads:

Digitized by Google Original from UNIVERSITY OF MICHIGAN

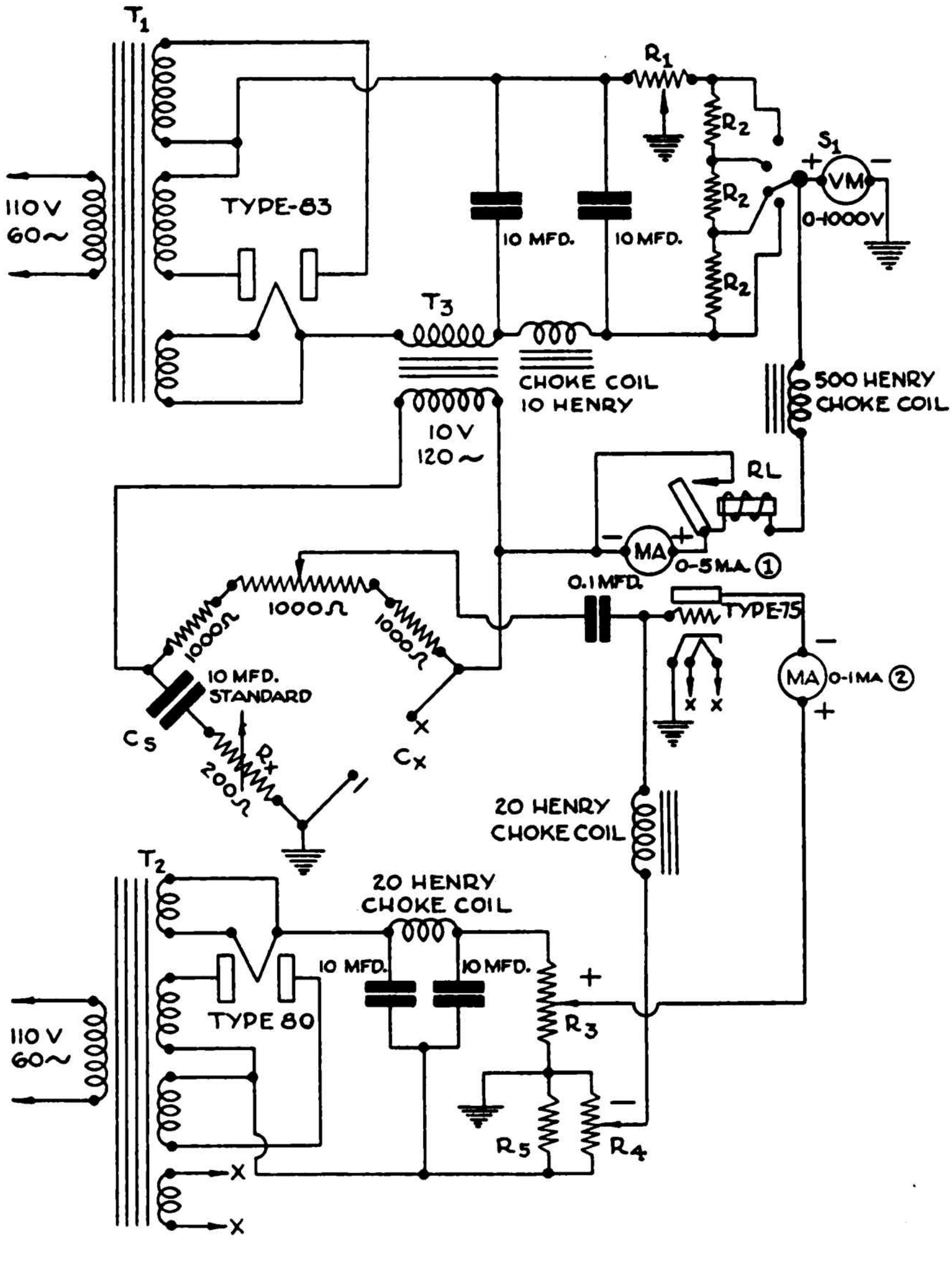

Legend:

T_1—Main Power Transformer

T_2—Power transformer for vacuum tube voltmeter supply

R_1—Potentiometer for fine voltage adjustment

Digitized by Google Original from UNIVERSITY OF MICHIGAN

R_2—Tapped voltage divider for coarse voltage adjustment

S_1—Voltage range switch

VM—0-1000 volts D.C. voltmeter (1000 ohms per volt)

T_3—Transformer and choke combination to produce 120 cycle A.C. voltage supply

RL—Protective relay for D.C. milliammeter, set to close contacts at 5 milliamperes

MA_1—0-5 milliampere leakage current milliammeter

MA_2—0-1 milliampere plate milliammeter for vacuum tube voltmeter

R_3—Potentiometer for adjusting plate voltage on vacuum tube voltmeter

R_4—Potentiometer for regulating negative bias on vacuum tube voltmeter thus serving as a sensitivity control

R_5—Bleeder resistor.

In the construction of this bridge arrangement, the 1000 ohm potentiometer is calibrated to read directly in terms of the standard capacitor C_s. The 200 ohm variable resistor is calibrated to read equivalent series resistance in ohms but based on a capacity of 10 microfarads being connected at point C_x. For that reason correct readings of equivalent series resistance must be determined from the following relation:

$$R_c = \frac{C_s}{C_x} R_x$$

Where R_x is value read and R_c is the corrected value of equivalent series resistance of the capacitor under measurement at point C_x.

Digitized by Google Original from UNIVERSITY OF MICHIGAN

Where it is necessary to make capacity and equivalent series resistance measurements of capacitors of relatively large capacities of the order of, for example: 1000 to 10,000 microfarads, the bridge method becomes impractical. For determining the characteristics of such capacitors, the following circuit has been devised:

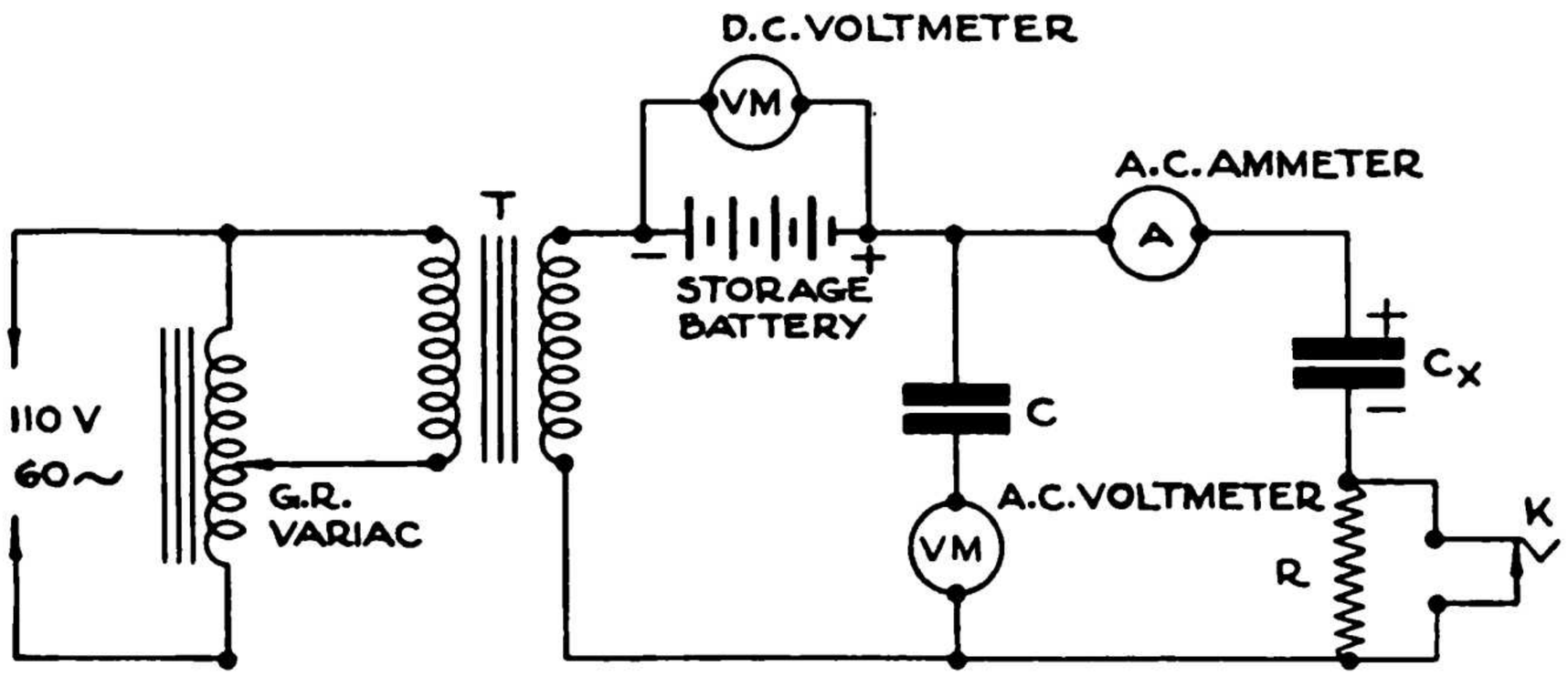

Legend:

T—Step down power transformer
C—200 microfarad non-polarized electrolytic capacitor
R—Resistor
K—Switch to short-circuit R
C_x—Capacitor under test.

The operation of this circuit is briefly as follows: with switch K closed, determine the A.C. I_1, at some definite A.C. voltage E_1 and then with switch K open determine the A.C. I_2 at an A.C. voltage E_2. In actual practice, the A.C. voltage is kept constant by adjusting the primary voltage control (variac) for both current readings. This is very convenient where it is desired to prepare charts of values for more rapid determinations.

Digitized by Google Original from UNIVERSITY OF MICHIGAN

The two current values obtained are substituted in the following formulae.

$$Z_1 = \frac{E_1}{I_1}$$

and $Z_2 = \frac{E_2}{I_2}$

Having determined the two impedance values Z_1 and Z_2, the equivalent series resistance is obtained by inserting the two impedance values in the following formula.

$$R_x = \frac{(Z_2)^2 - (Z_1)^2 - R^2}{2R}$$

Where R_x is the equivalent series resistance of C_x.

It must be noted that the greatest possible accuracy is necessary in the determination of the two impedance values Z_1 and Z_2.

In most cases the resistor may have a value of one ohm and where this is practical the formula may be simplified to the following form:

$$R_x = \frac{(Z_2)^2 - (Z_1)^2 - 1}{2}$$

In all cases the value of R must be accurately known and the physical size of the resistor must be sufficiently large so that the current passing through it does not cause a temperature rise.

Having determined the equivalent series resistance and the value of Z_1, the capacity (in microfarads) can be calculated by inserting these values into the following formula:

Digitized by Google Original from UNIVERSITY OF MICHIGAN

$$C_x = \frac{10^6}{2\pi f \sqrt{(Z_1)^2 - (R_x)^2}}$$

Assuming that the value of R_x is of a minor order, a quick approximation of the capacity can be determined by the use of the following relation:

$$C_x = \frac{2654}{Z_1}$$

Where 2654 is the impedance of a one microfarad capacitor at a frequency of 60 cycles.

Power Factor can be determined, from the equivalent series resistance value and the impedance, by inserting these values into the following formula:

$$\text{Power Factor} = \frac{R_x}{Z_1}$$

Applications of Electrolytic Capacitors

With the exception of a few special applications, the majority of all direct current type electrolytic capacitors are employed in filter attenuation networks, of the type used to produce direct current from rectified alternating current.

Due, therefore, to the importance of obtaining a clear understanding of the functioning of electrolytic capacitors in this type of application, a review of the more simple forms of rectifier and filter circuits should not be found out of place.

Digitized by Google Original from UNIVERSITY OF MICHIGAN

Chapter XV

RECTIFIERS AND FILTER CIRCUITS

Rectifiers

A RECTIFIER is, as its name implies, an electrical device which rectifies alternating current into direct current. The direct current produced, by rectifying alternating current, is pulsating in character but nevertheless flowing in one direction only. A rectifier functions in this way because of its ability to allow current to flow more readily in one direction than in the other.

Although there are many types of rectifiers operating on mechanical, chemical and electronic principles, electrolytic capacitor applications are generally confined to the use of the electronic or so-called thermionic type of rectifier, utilizing vacuum tubes as the rectifying elements. It is to this type, therefore, that the discussion here will be principally, but not entirely confined.

A fundamental rectifier circuit is shown in the following illustration:

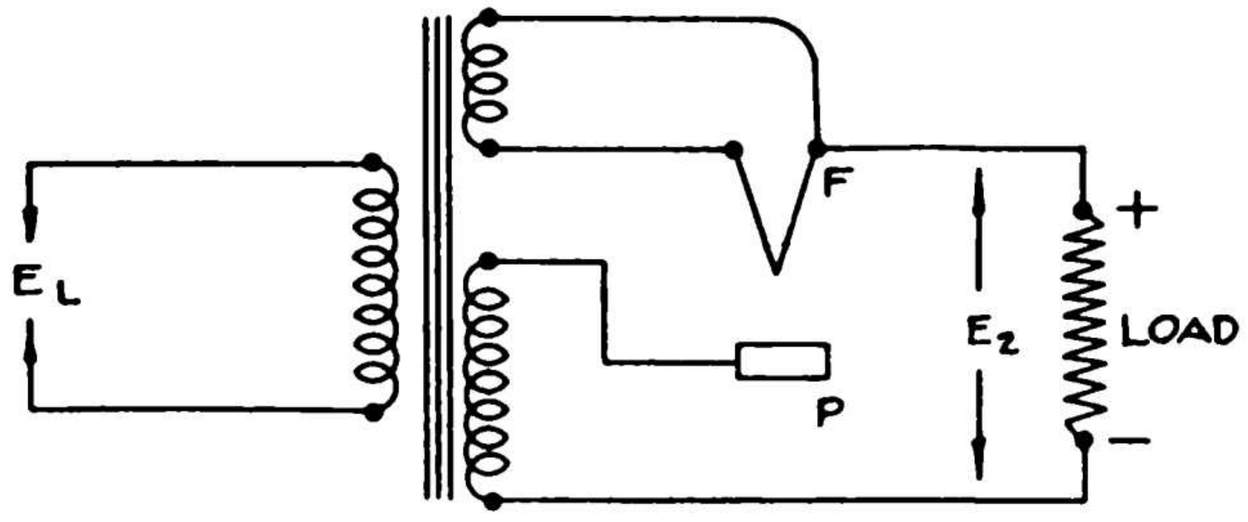

Digitized by Google Original from UNIVERSITY OF MICHIGAN

The theoretical operation of the two-element vacuum tube as a rectifier is as follows:

As soon as the filament *F* is heated and emits electrons, these electrons are drawn over to the plate *P* when the plate is positive with respect to the filament, resulting in a flow of current through the circuit. If this current path is traced out, it is seen that, starting at the lower end of the transformer secondary, the current flows to the lower terminal of the load, through the load to the upper terminal of the load, hence to the filament and across to the plate by electronic conduction and back to the upper end of the transformer, thus completing the circuit.

On the next alternation of alternating current the potential in the secondary of the transformer is reversed, and the plate of the rectifier tube becomes negative with respect to the filament. Under these conditions the tube does not conduct current but becomes an almost infinite resistance. Thus only those alternations flowing in the direction in which the tube conducts are allowed to pass, and pulsating direct current results.

The following graphic figures show the current in the transformer primary and the load:

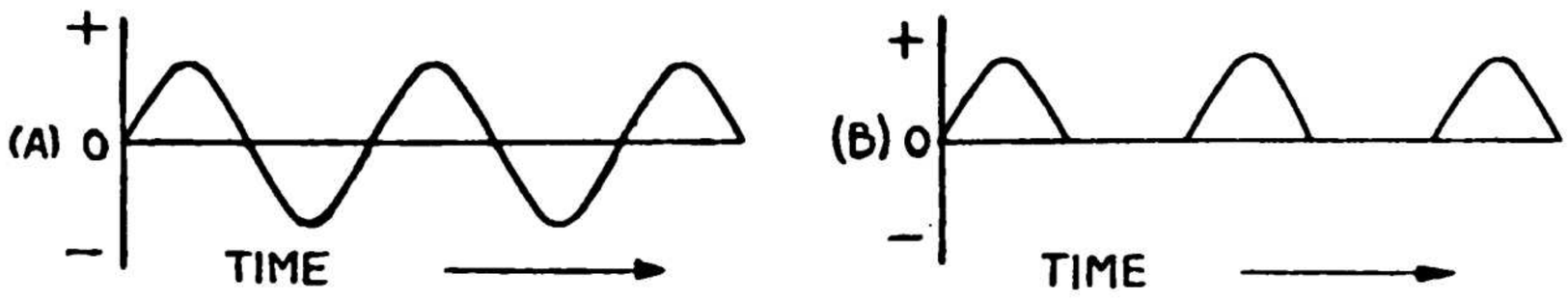

The alternating current entering the transformer primary is shown as a sinusoidal wave from (a) and the rectified direct current delivered to the load is

Digitized by Google Original from UNIVERSITY OF MICHIGAN

shown as a pulsating wave from (b). Only one half of each cycle is useful in furnishing current to the load, so this arrangement is termed a "half-wave" rectifier system.

In order to utilize the remaining half of the wave, a number of schemes have been devised. Such arrangements are termed "full-wave" rectifier systems. A typical full wave circuit arrangement follows:

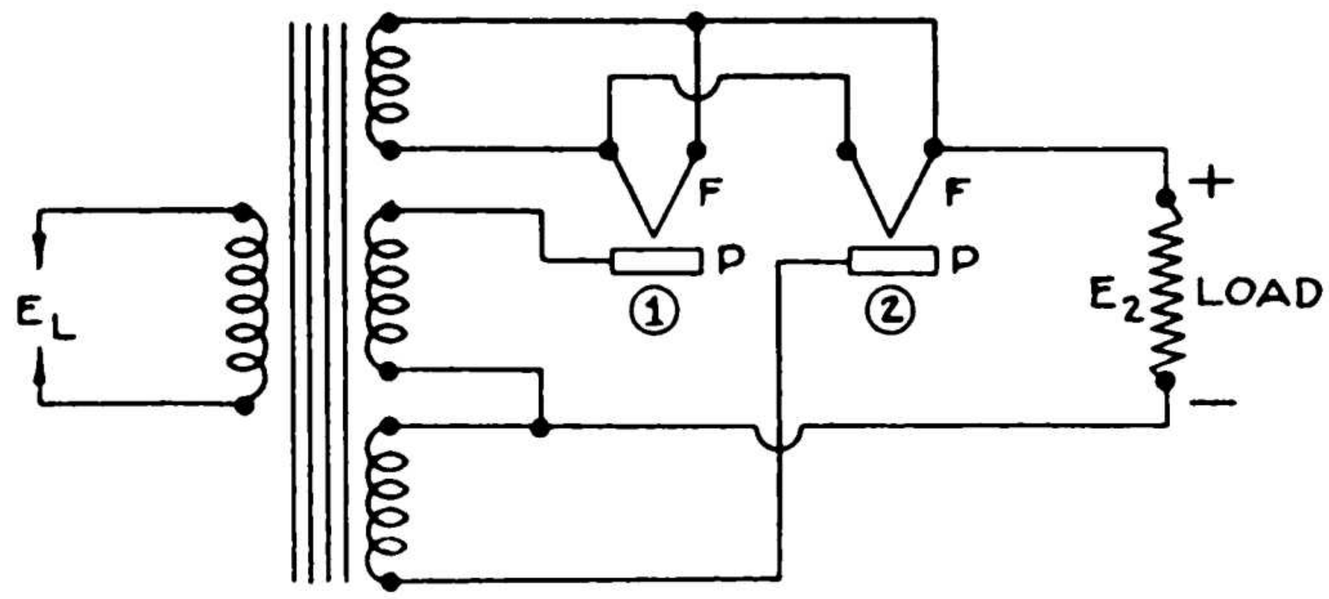

In this arrangement the transformer has two identical secondary windings with a connection brought out from the center or one secondary winding tapped at the exact center of it. When the upper end of the secondary winding is positive, current can flow through rectifier No. 1 to the load; this current cannot pass through rectifier No. 2 because its resistance is infinite to current coming from that direction. The circuit is completed through the transformer center connection. At the same time the lower end of the winding is negative and no current can flow through rectifier No. 2. When the current reverses, however, the upper end of the winding is negative and no current flows through rectifier No. 1, while the lower end is positive and therefore rectifier No. 2 passes current to the load, the return connection again being the center connection between

Digitized by Google Original from UNIVERSITY OF MICHIGAN

the two secondary windings. The resulting wave shape is shown in the following graphic illustrations.

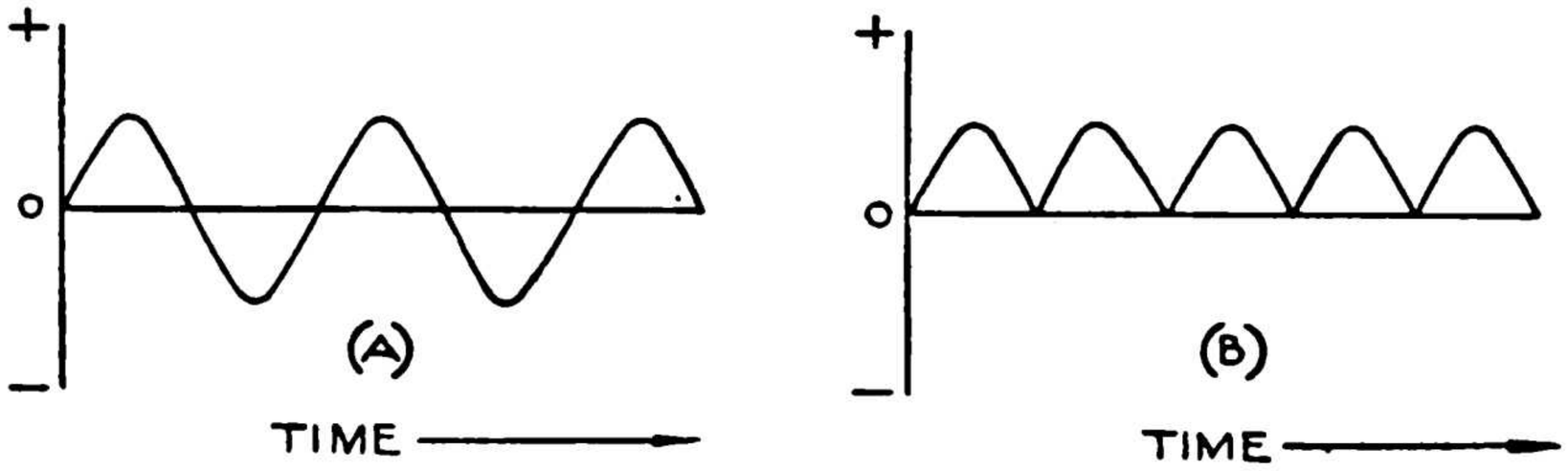

Thus all of the wave form has been utilized and the amount of power which can be utilized at the load is doubled. In order to maintain the same output voltage (instantaneous) as obtained with the half-wave arrangement, however, each half of the transformer secondary must produce the same voltage produced by the single secondary winding of the half-wave circuit.

Types of Rectifiers

1. The High-Vacuum Type.

The high-vacuum rectifier tube is a two or three element tube from which all possible traces of gas are removed. The two most important characteristics of this type of rectifier are: (a) the maximum peak plate current, and (b) the maximum inverse peak voltage.

The maximum peak plate current is the safe value of current that the rectifier tube can handle as a steady state operating condition. Normally it is governed by the cathode emission permissible with a given tube. As the direct current flows in a rectifier tube for only half the time the tube is in operation, this current, as indicated by a plate milliammeter, should never be allowed

Digitized by Google Original from UNIVERSITY OF MICHIGAN

to exceed more than half the maximum peak plate-current rating of the tube.

The maximum inverse peak voltage is the potential applied across the rectifier tube while it is non-conducting. In other words, it is the voltage across the tube during the alternation the tube is idle. In general, this maximum inverse peak voltage is the full voltage of the transformer secondary.

An important factor in connection with the high-vacuum type rectifier tube is the voltage drop across it during operation. When the cathode is heated, electrons are drawn toward the plate and a space-charge voltage drop is built up in the tube which depends upon the current drawn and the construction of the tube. This voltage drop may vary from a few volts to several hundred volts. The regulation in a circuit using such a tube is largely governed by this voltage drop in the tube.

2. The Mercury-Vapor Type.

In the high-vacuum type rectifier tube the electrons which are emitted by the cathode must overcome a space charge, which surrounds the cathode like a shield, before they can reach the plate. This space charge is the cause of the large voltage drop between the elements and is the principal disadvantage of the high-vacuum type tube. In the mercury-vapor tube, mercury-vapor gas at low pressure is introduced into the tube. The presence of this gas changes entirely the theoretical operation of the tube.

Digitized by Google Original from UNIVERSITY OF MICHIGAN

When the filament of the tube is lighted, the mercury vapor is raised to operating temperature. When the electrons are emitted by the filament and are drawn toward the plate, they collide with atoms of mercury vapor. The collision of an electron with an atom of mercury vapor knocks one of the atom's electrons outside of the influence of its nucleus, and the atom, being minus an electron, becomes a positive ion. This positive ion is immediately drawn over to the space charge surrounding the filament and neutralizes a negative ion in the space charge. In the normal operation of the mercury-vapor tube there are enough positive ions released from the mercury vapor to practically neutralize the negative space charge surrounding the filament. In fact it reduces the space charge voltage drop to approximately 15 volts, and it remains at this value, regardless of load, during the normal operation of the tube. This means that the voltage regulation of the rectifier unit depends only on the regulation of the transformer and circuit.

As long as a positive potential is applied to the plate, current will flow through the tube from filament to plate. Therefore, if an alternating potential is applied to the tube, rectification will result. When the plate is negatively charged, it repels what free electrons are in the vicinity as the filament is now positive and the space charge neutralized; and as the cold plate does not emit electrons there can be no ionization of the mercury vapor owing to collision and no flow of current through the tube.

The most important characteristics of the mercury-vapor rectifier tube are: the maximum peak plate

Digitized by Google Original from UNIVERSITY OF MICHIGAN

current at which the tube can be operated without filament disintegration, and the maximum inverse peak voltage at which the tube can be operated without flashing back.

Since the voltage drop in the tube is only 15 volts it can be neglected, and the inverse voltage is practically the full potential of the transformer secondary. The peak plate current depends on the circuit conditions. The peak current, when the rectifier is connected to a resistance load, is simply the maximum of the sine wave of the rectified pulses. If inductance is placed in series with the load, the output-current curve takes the form of successive square topped blocks, and the peak plate current is nearly equal to the output current. See the following illustration.

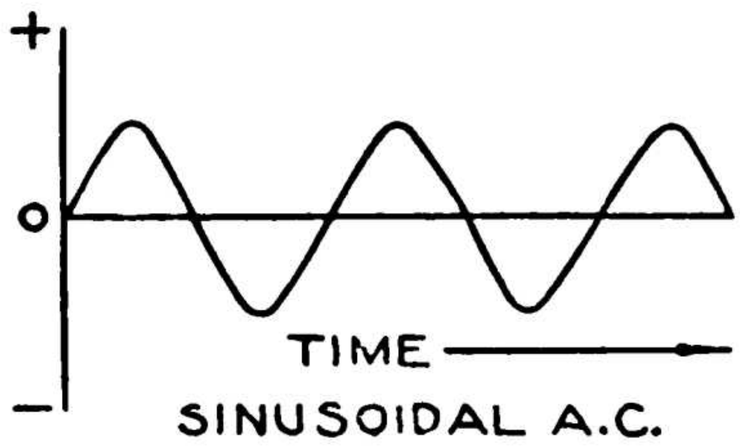

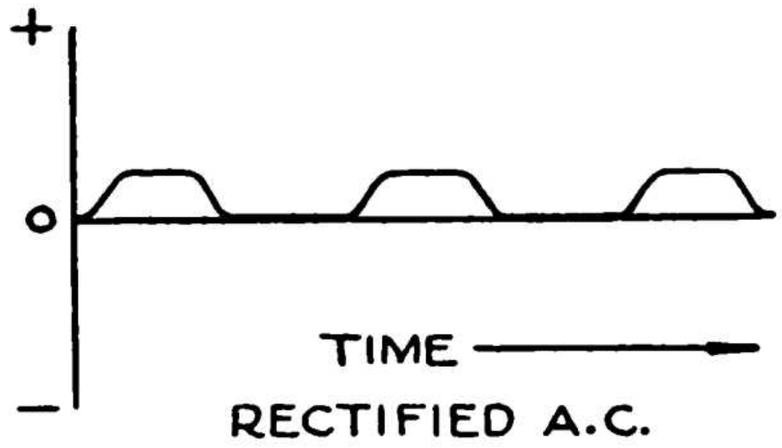

If a capacity is connected across the rectifier output, the peak plate current may reach values equal to from three to four times the output current, and for this reason a capacity is seldom recommended across the output of a mercury-vapor rectifier tube.

Rectifier Circuits

Rectifier circuits may be divided into the following general classes:

Digitized by Google Original from UNIVERSITY OF MICHIGAN

1. Half-wave circuits
2. Full-wave circuits
3. Bridge circuits
4. Voltage doubling circuits
5. Current doubling circuits
6. Voltage quadrupling circuits

The following circuit diagrams serve to illustrate the various classes of rectifier circuits. In these diagrams the filament heating transformers have been omitted for sake of simplicity.

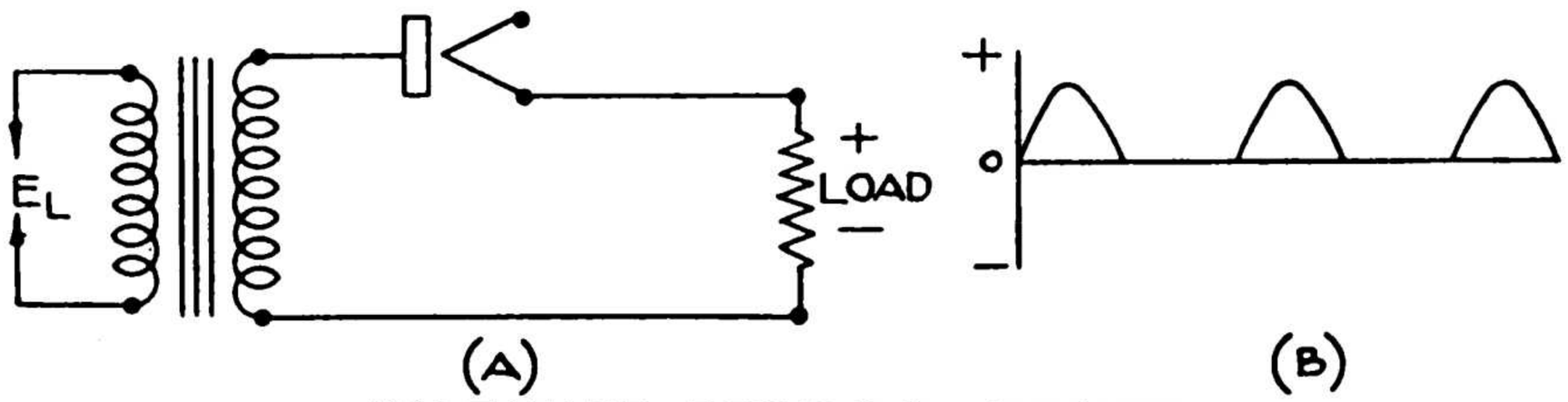

HALF-WAVE RECTIFIER CIRCUIT

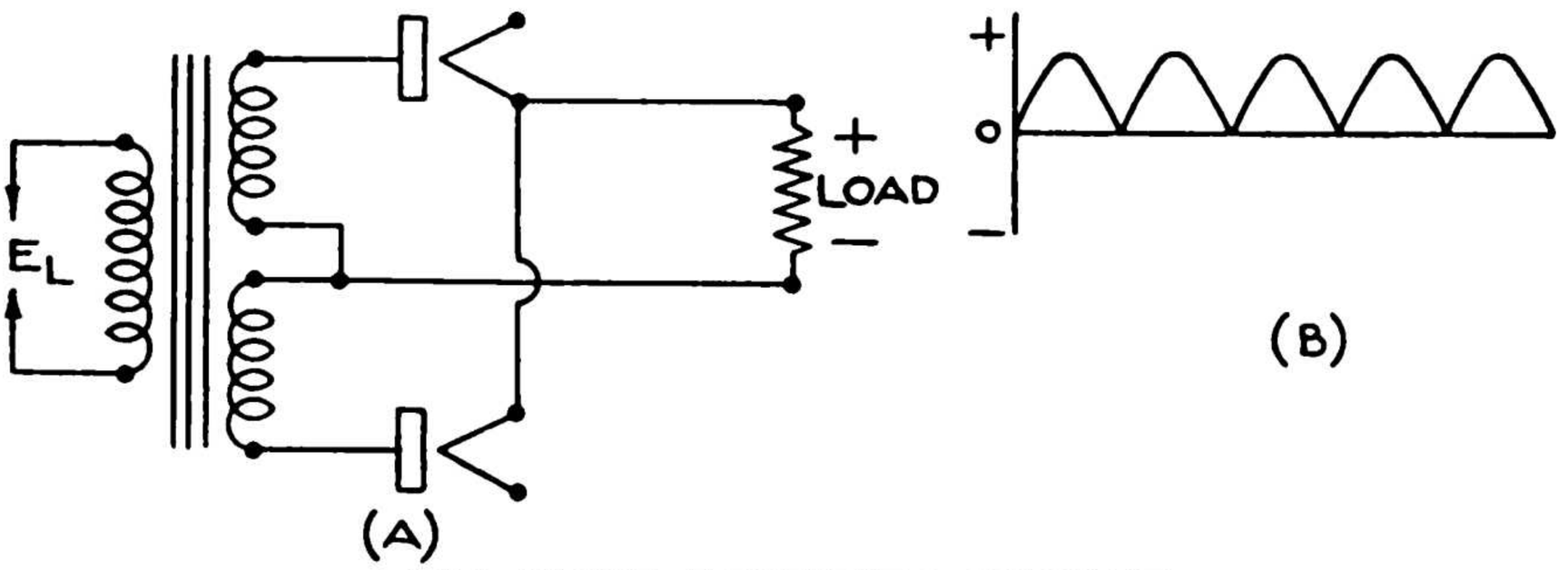

FULL-WAVE RECTIFIER CIRCUIT

There are other schemes of rectifier arrangement for voltage multiplication which use single transformers but, as these circuits employ capacitors in their functioning, they will be mentioned later under the heading of filter networks. It should be pointed out that there are many other rectifier circuits, in particular the polyphase type, which are not mentioned in this book as

Digitized by Google Original from UNIVERSITY OF MICHIGAN

they generally are employed for rectification of voltages beyond the range of the application or use of electrolytic capacitors.

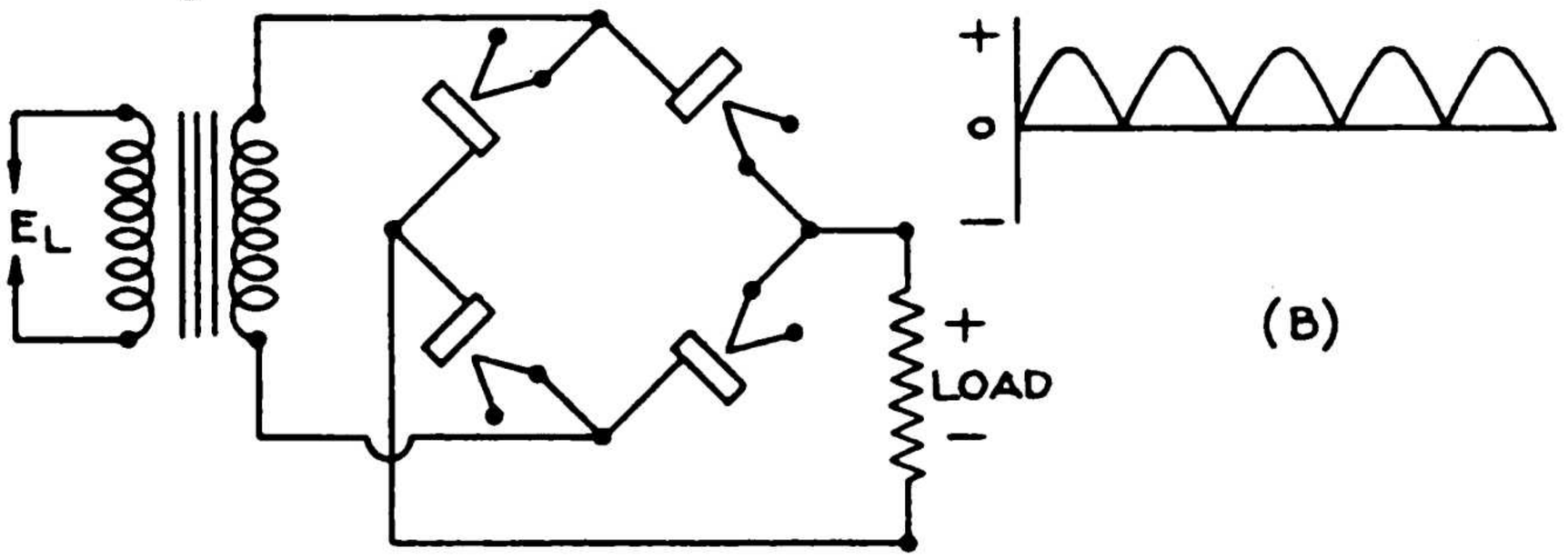

FULL-WAVE BRIDGE RECTIFIER CIRCUIT

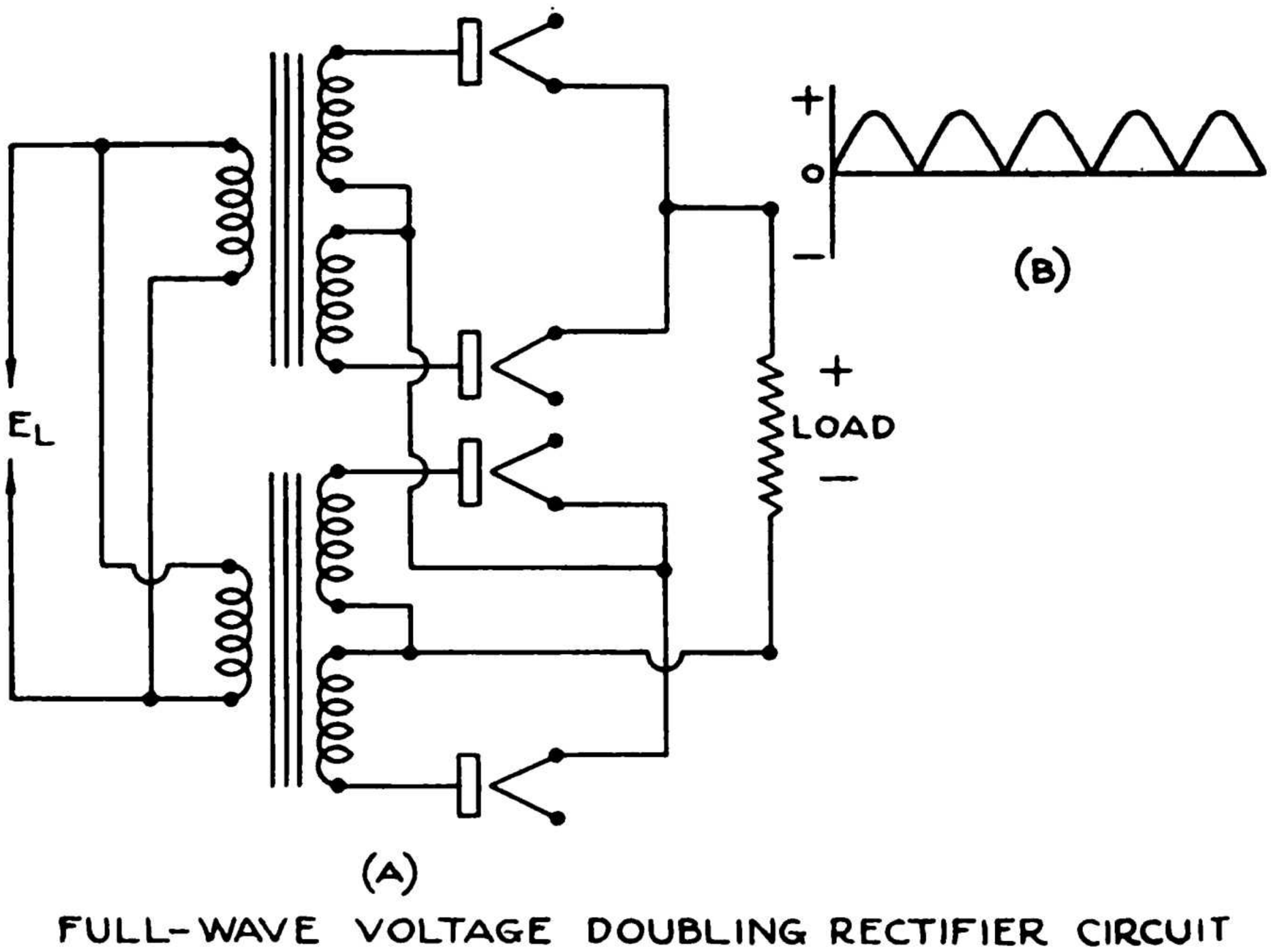

FULL-WAVE VOLTAGE DOUBLING RECTIFIER CIRCUIT

Filter Circuits

A complete study of filter theory, involving the use of exponential and hyperbolic functions, is beyond

Digitized by Google Original from UNIVERSITY OF MICHIGAN

the intended scope of this book but an attempt will be made to cover the more important characteristics of filter networks in which electrolytic capacitors are component parts.

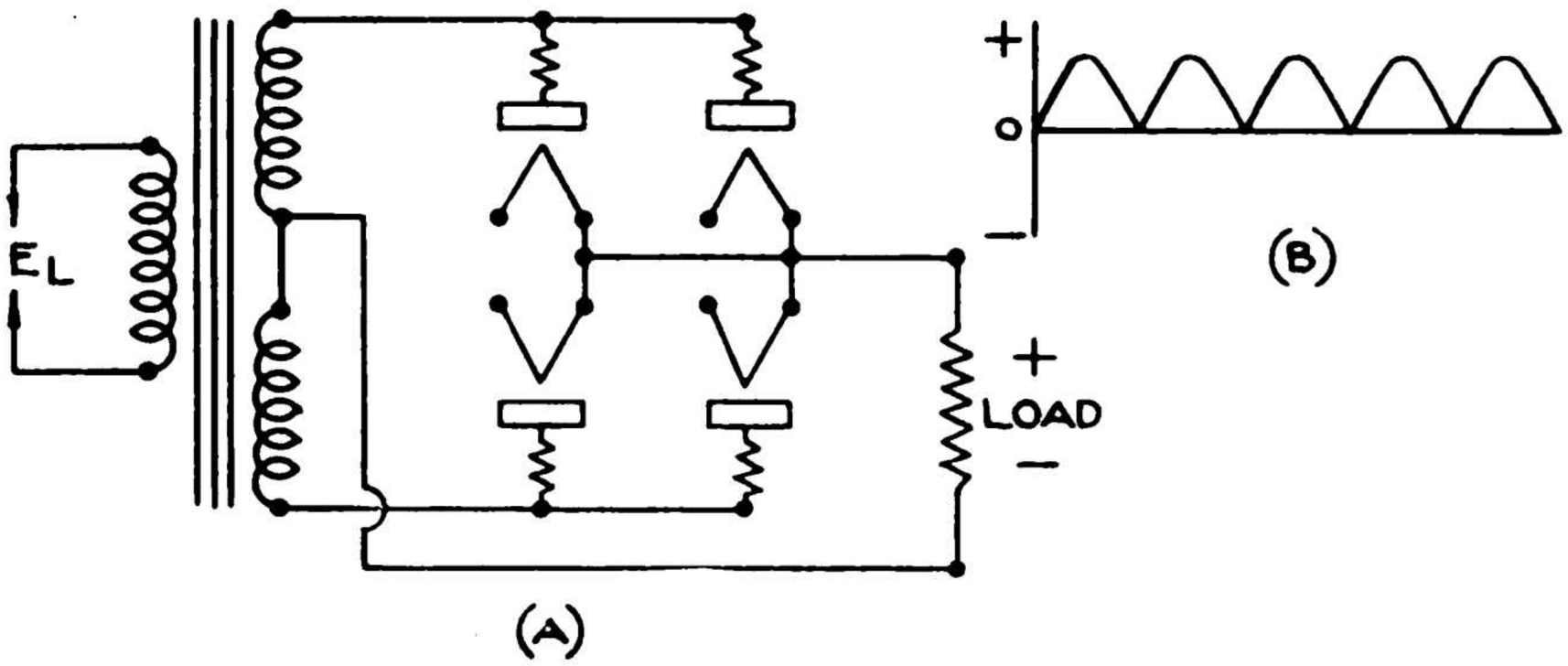

FULL-WAVE CURRENT DOUBLING RECTIFIER CIRCUIT

Although any resonant circuit is useful for selecting energy of a desired frequency and rejecting energy of undesired frequencies, certain combinations of circuit elements are better adapted to transmitting more or less uniformly over a band of frequencies, or rejecting over a band of frequencies.

Such rejecting action is known as attenuation and such combinations of circuit elements are called filters. A "low pass" filter, as shown below, is used to transmit energy below a given frequency limit and to attenuate energy of higher frequencies.

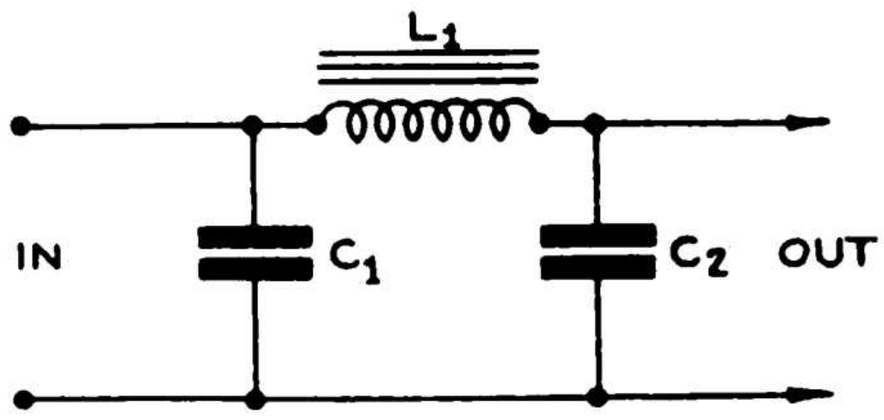

Digitized by Google Original from UNIVERSITY OF MICHIGAN

Such a filter network is called a π or pi section because its appearance resembles the Greek letter π.

The action of such a filter network takes the graphic form illustrated below.

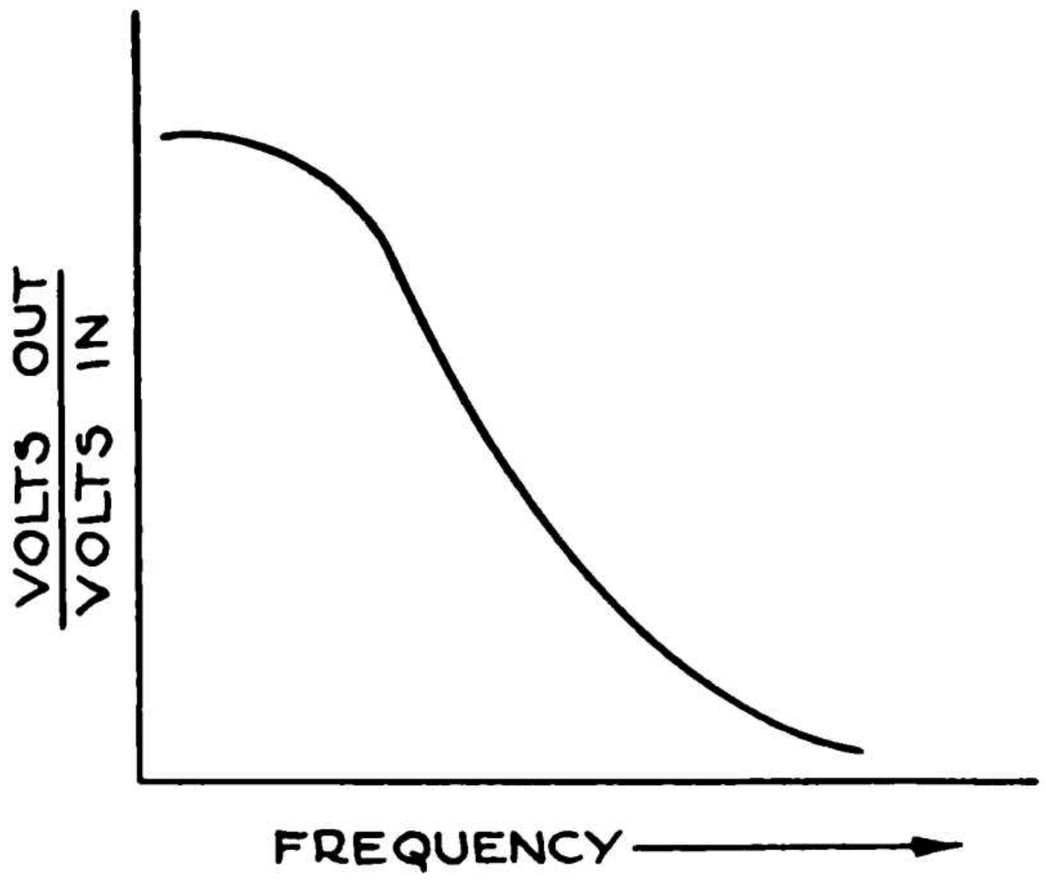

The treatment of filter circuits as applied to the output of a rectifier becomes, from a mathematical viewpoint, rather involved because in such an application the problem involved is not one of simply attenuating certain frequencies and passing others. Rather, there is a triple function to be performed. The pulsating direct current must be "smoothed out," alternating currents of all frequencies must be attenuated to the maximum degree and the direct current must pass with the minimum degree of attenuation.

The current delivered by a rectifier consists of a direct current and an alternating current component. For all practical purposes this alternating-current component causes too much of a variation in the output of the rectifier. It is necessary, therefore, that this current be filtered.

Digitized by Google Original from UNIVERSITY OF MICHIGAN

A study of the following illustration will make clear the conditions in a typical rectifier circuit, as a whole, from input to output.

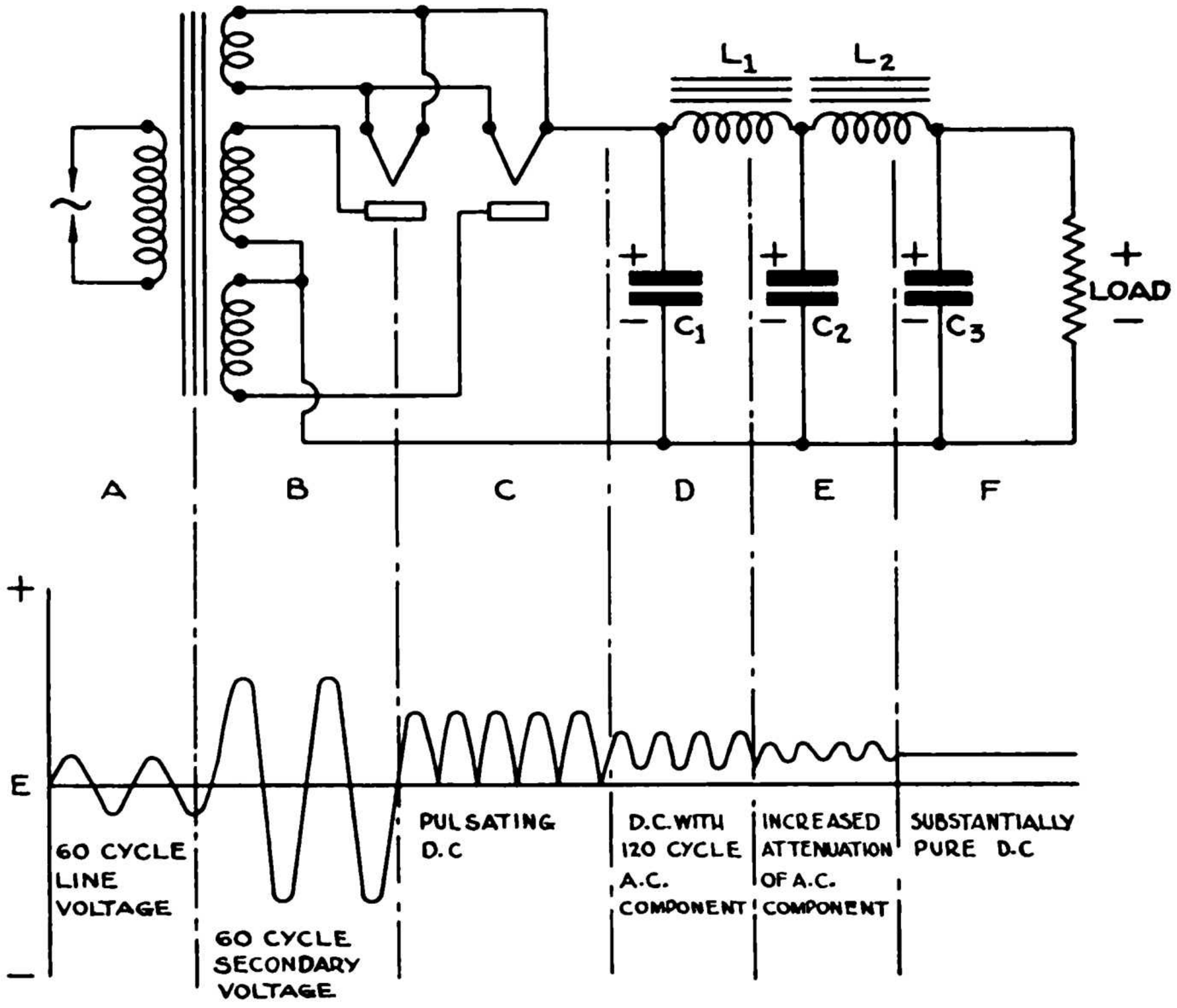

The first section *A* of the graphic representation shows the alternating current flowing in the transformer primary and takes the form of a pure sine wave. In most instances this is a 60-cycle current, although it might in commercial practice, frequently be 25 or 50 cycles.

The second section *B* shows the output of the transformer secondary, which is also a pure sine wave.

Digitized by Google Original from UNIVERSITY OF MICHIGAN

The voltage has been increased and this is shown by the increased amplitude of the wave.

The third section *C* shows the effect of a full wave rectifier circuit on the transformer secondary voltage shown in section *B*. It is noted that there are two pulses of direct current for each cycle of alternating current. It is just as if the sine wave of the transformer secondary voltage were folded along the zero line, the negative alternations becoming positive pulses by the rectifier action.

The fourth section *D* shows the effect of the "smoothing" action of the capacitor C_1.

The fifth section *E* shows the effect of the attenuation by the first filter section L_1 and C_2, of the 120 cycle alternating current component or ripple.

The sixth section *F* shows the effect of still greater attenuation of the 120 cycle ripple component by the second filter section L_2 and C_3.

Ordinarily, all filters used in connection with rectifier circuits are so-called low-pass filters and as such are designed to pass currents of all frequencies below a critical frequency and to substantially attenuate or reduce the amplitude of currents of all frequencies above the critical frequency.

A simple L-type low-pass filter is shown by the following diagram.

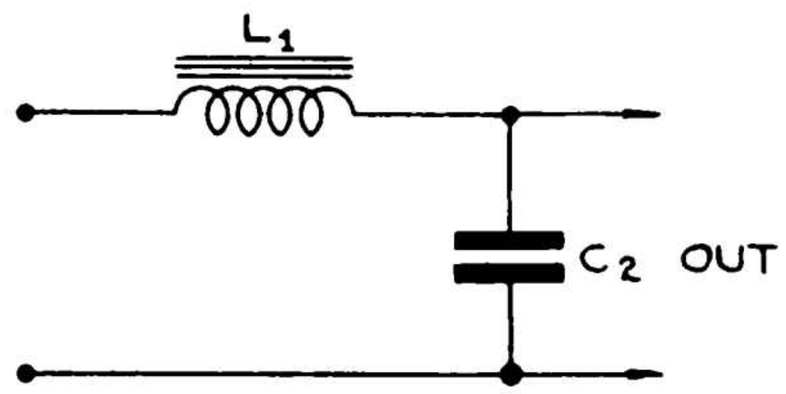

Digitized by Google Original from UNIVERSITY OF MICHIGAN

The critical or "cut-off" frequency f, in cycles per second, is found by the equation

$$f = \frac{1}{\pi \sqrt{L_1 C_2}}$$

Where the inductance L_1 is in henrys and the capacity C_2 is in farads.

Such filters consist of a series-arm impedance which is always an inductance or choke coil, and a shunt impedance which is always a capacitor. The series arm, therefore, is always inductive and the shunt arm capacitive.

Such filters may have a capacitor input or a choke input and are therefore generally so designated. There is considerable difference in the action of these two types of filter circuits as will be shown. The capacitor-input filter is generally recommended for use and with the high vacuum type of tube rectifier while the choke-input filter is recommended for use with the mercury-vapor type of rectifier tube.

The function of the inductance in the filter network is to smooth out the current fluctuations while the function of the capacitance is to smooth out the voltage variations. Both operating together constitute the filter. In visualizing the operation of a filter, it is necessary to consider the effect of inductance and capacity on an alternating current. The inductive choke coil tends to oppose any change in the current in the circuit and depends for its operation on the counter electromotive force it sets up when an alternating current flows through it. The source of current is unim-

Digitized by Google Original from UNIVERSITY OF MICHIGAN

portant; it may come from a direct-current generator and be the alternating current component set up by the commutator ripple or it may be from a vacuum tube rectifier. The action of the choke in limiting current variations is the same in both instances.

The action of the capacitor in the filter network is not the same, however, regardless of the voltage source. When a capacitor is connected to an alternating current source such as a generator the counter electromotive force supplied by the capacitor, once it is charged, will equal the electromotive force of the source regardless of the size of the capacitor. Also, as the capacitor can discharge back through the generator, the voltage across the capacitor will always be the voltage of the source.

When a capacitor is connected across the output of a rectifier, an entirely different action takes place. This action will now be described.

The first pulse of current passing through the rectifier will partially charge the capacitor. This charge is generally but a fraction of the total charge the capacitor is capable of holding. As the rectifier tube is unidirectional in conductivity, the charge can leak off the capacitor only by current flowing through the load. This it does but before it has all leaked off another pulse of current passes the rectifier and increases the charge of the capacitor. Therefore, as the discharge of the capacitor is slower than the charge, the capacitor finally becomes fully charged to its rated capacity.

Once the capacitor is fully charged the discharge action becomes regular. As some period of time does exist between pulses of current from the rectifier, the

Digitized by Google Original from UNIVERSITY OF MICHIGAN

capacitor discharges to a certain extent: so, its potential is lower at the start of each pulse than at the end of the pulse. This causes a variation in the value of the voltage fed to the output. The amount of this variation obviously has an effect on the ripple present in the final output current. It must also be observed that this variation is greater when the time periods between capacitor charging pulses are greater. It varies directly with this factor and for this reason there is less ripple from a full-wave rectifier than from a half-wave rectifier.

It is also observed that the capacitor voltage depends upon the load. If the load is such as to permit the capacitor to discharge too rapidly, the rectifier pulses will not charge the capacitor rapidly enough to maintain the required voltage. For this reason, the output voltage of a rectifier unit decreases with increase in load. To decrease the capacitor-voltage variations, the capacitor must be sufficiently large in capacity to hold more of a charge than can be drained off by the load in the time intervals between pulses from the rectifier. Also the rectifier must be of such current rating as to be capable of charging the capacitor to the required potential.

Both by theoretical treatment and practical application it has been found that, in a capacitor-input filter network, the first capacitor C_1 produces a great effect on the D.C. voltage output and regulation of the rectifier and determines the magnitude of the alternating current ripple voltage which must be subsequently attenuated by the filter network.

In order to obtain a clearer understanding of the factors governing this attenuation of the alternating

Digitized by Google Original from UNIVERSITY OF MICHIGAN

current ripple voltage, a theoretical consideration of a typical single π filter network will follow:

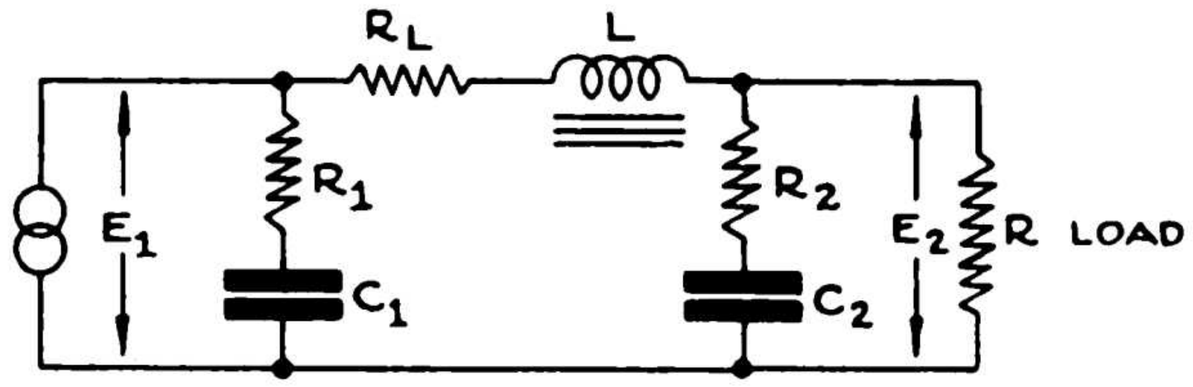

E_1 = A.C. Voltage across capacitor C_1
E_2 = A.C. Voltage across capacitor C_2

This same network can also be represented by the following equivalent arrangement.

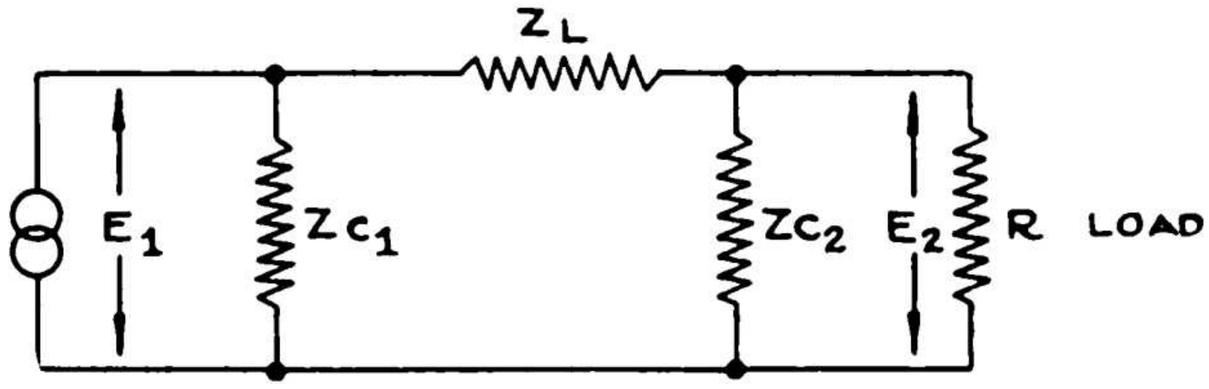

It can be seen that the ratio of attenuation of the alternating current ripple voltage is equal to $\frac{E_2}{E_1}$

And

$$\frac{E_2}{E_1} = \frac{Z_{c2}}{Z_L + Z_{c2}}$$

Therefore

$$E_2 = \frac{Z_{c2}}{Z_L + Z_{c2}} \; E_1$$

Since the alternating current ripple voltage across the first capacitor C_1 is determined by the alternating current passing through it, the equation for attenua-

Digitized by Google Original from UNIVERSITY OF MICHIGAN

tion can be transformed into one for the determination of the output A.C. ripple voltage in terms of the circuit constants.

Therefore

$$E_1 = IZ_{c1}$$

And

$$E_2 = \frac{IZ_{c1}\ Z_{c2}}{Z_L + Z_{c2}}$$

Also

$$E_2 = \frac{IZ_{c2}}{2\ \pi\ f\ C_1\ (Z_L + Z_{c2})}$$

From this it can be seen that the output ripple voltage E_2 varies with changes in value of the first capacitor C_1.

To illustrate this relationship between the value of the first capacitor C_1 and the output ripple voltage E_2, reference is made to an actual example wherein the circuit constants are as follows:

$f = 120$ cycles per second
$L = 21$ henrys
$R_L = 872$ ohms
$I = .080$ amperes
$C_1 =$ variable
$C_2 = 8$ microfarads
$R_1 =$ zero
$R_2 =$ zero

And

$Z_{c1} =$ variable
$Z_{c2} = 166$ ohms
$Z_L = 15{,}800$ ohms

The resulting relationship is plotted in the following graphic illustration:

Digitized by Google Original from UNIVERSITY OF MICHIGAN

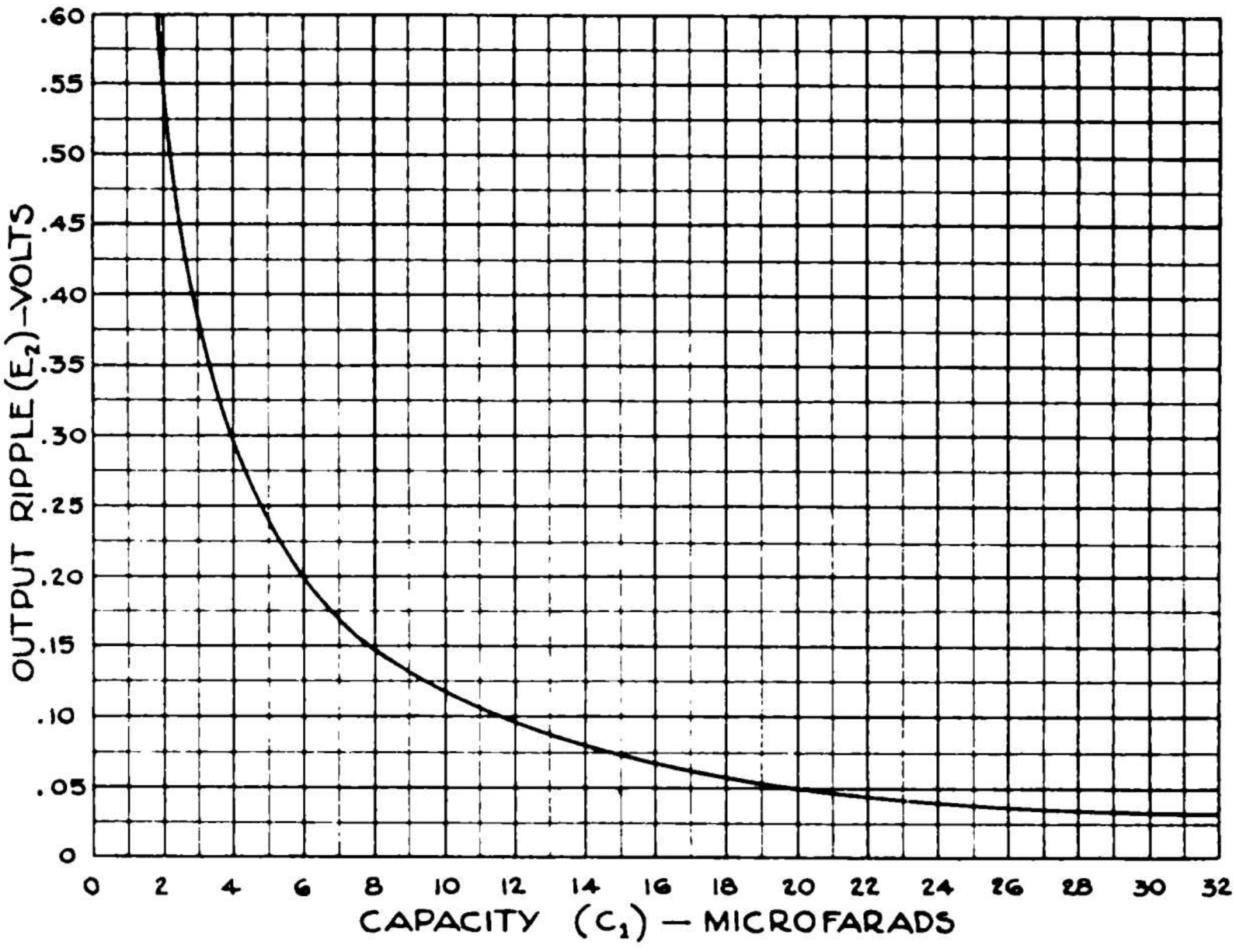

The determination of the effect of variations in the capacity of the second capacitor C_2 would be made in the same manner.

Effect of Increased Power Factor on Attenuation of the Output Ripple Voltage

The graphic illustration just shown is based on the use of capacitors of substantially zero power factor. Electrolytic capacitors, on the other hand, have substantially high power factors so this fact must also be given due consideration. The effect, however, of larger values of power factor is commonly exaggerated, so much so, in fact, that it is quite generally assumed that, for example, an eight microfarad electrolytic capacitor with a power factor of say ten per cent can be replaced

Digitized by Google Original from UNIVERSITY OF MICHIGAN

in a filter circuit with a four microfarad capacitor of substantially zero power factor. Such a generally accepted opinion is very far from the facts in the case and to illustrate the actual relationship, reference is made to the following graphic illustration.

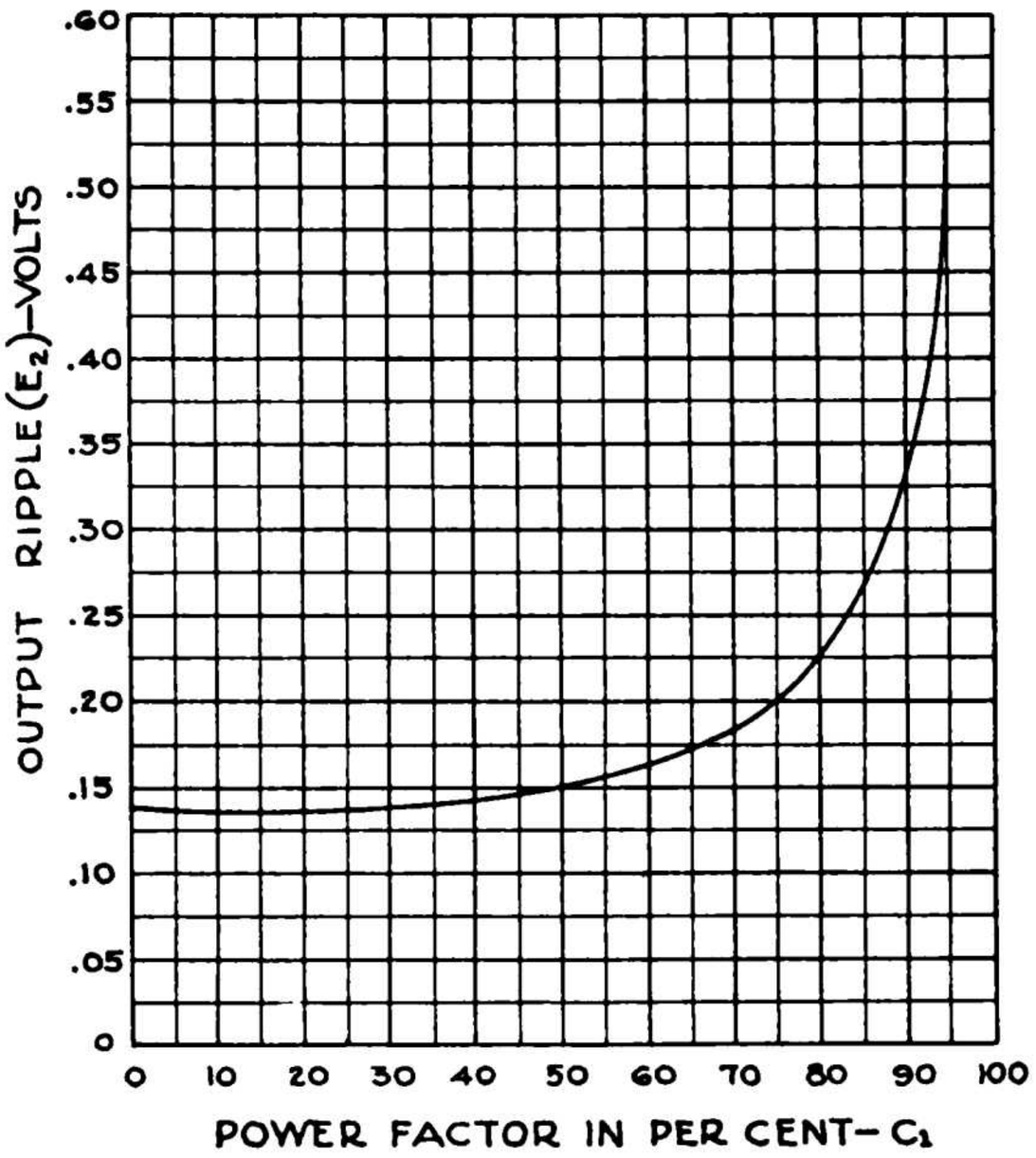

In this illustration, the same circuit constants are used as were used in the last illustration except both C_1 and C_2 are capacitors of 8 microfarad capacity. The power factor of C_2 is held at substantially zero while the power factor of C_1 is increased in increments from zero to almost 100 per cent.

It must be pointed out that in these various illustrations the value of R, as representing the direct current load, is so much greater than Z_{c_2} that it is disregarded for increased simplicity.

The derivation of the plotted values is from the following equation:

Digitized by Google Original from UNIVERSITY OF MICHIGAN

$$E_2 = \frac{IZ_{c1} \quad Z_{c2}}{Z_L + Z_{c2}}$$

Where

$$\text{Power Factor} = \frac{R_1}{Z_{c1}}$$

And

R_1 is the equivalent series resistance of the first capacitor C_1.

Multiple Section Filters

Where sufficient attenuation of the alternating current ripple voltage cannot be obtained with a single π or L section filter it becomes necessary to add other similar sections. A typical two section filter is shown in the following illustration.

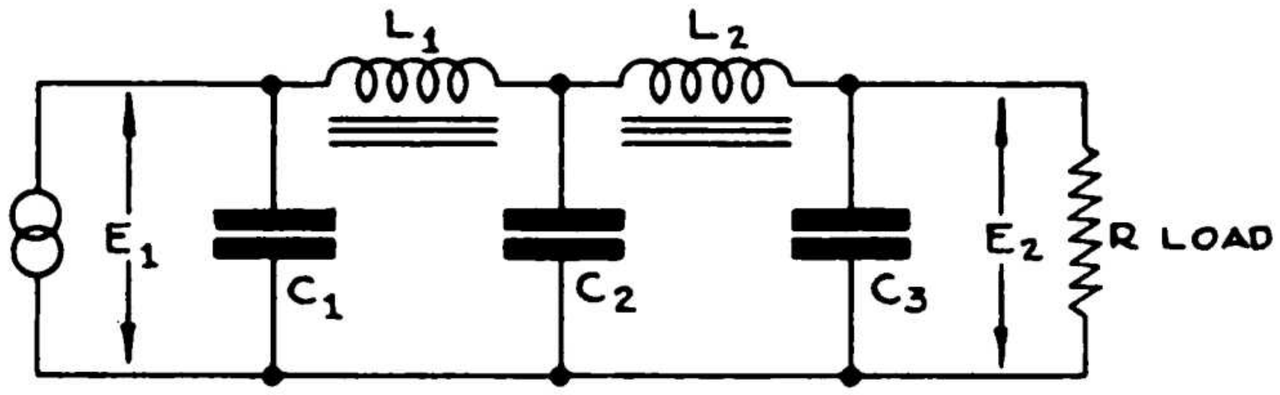

Such an arrangement of circuit components becomes a regular ladder type network and as in the previous illustrations can be shown as the following equivalent representation.

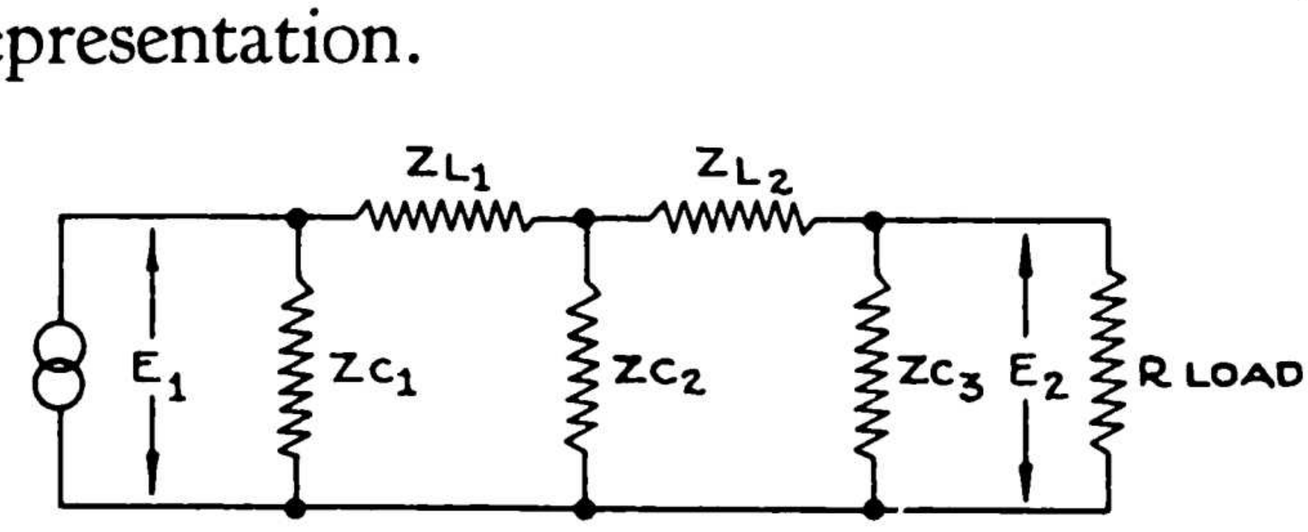

Digitized by Google Original from UNIVERSITY OF MICHIGAN

Also, as in the previously illustrated cases, the value of the output ripple voltage E_2 can be determined in values of attenuation of the input ripple voltage E_1 by use of the following equation:

$$E_2 = \frac{IZ_{c1} \quad Z_{c2} \quad Z_{c3}}{(Z_{L1} + Z_{c2})\ (Z_{L2} + Z_{c3})}$$

It is also important that the value of the last capacitor in the filter network be of sufficient size to provide the requisite "reservoir" action for proper regulation. This obviously means that the greater the direct current load, the higher the value of capacity required.

In radio receiver power supply applications, the last capacitor in the filter network is frequently required to function also as a radio frequency and audio frequency by-pass but investigations have shown that increased values of equivalent series resistance (or power factor) have a comparatively negligible effect on the radio frequency impedance of an electrolytic capacitor of the dry type. The wet type, on the other hand, has a very poor radio frequency characteristic so is not generally recommended for by-passing radio frequencies.

In this respect, however, it is important to keep the value of impedance of the last capacitor in the filter network as low as possible, as this impedance is normally common to the various circuits in a radio receiver and therefore effectively becomes a coupling medium between such circuits. For this reason too high a value of impedance may cause ripple-voltage modulation of the radio frequency current passing through the last

Digitized by Google Original from UNIVERSITY OF MICHIGAN

capacitor or may cause instability and oscillation in the receiver circuits.

Low Voltage, High Current Rectifiers and Filter Circuits

High-capacity low-voltage electrolytic capacitors find special application in filter networks where large values of direct current are obtained through the use of low voltage types of rectifiers.

Typical examples of the low voltage types of rectifiers are: the Rectigon and Tungar bulb rectifiers, the copper oxide rectifier, the cupric sulphide-magnesium oxide rectifier and the tantalum-lead-sulphuric acid electrolytic rectifier.

The Rectigon and Tungar bulb is an argon gas-filled, tungsten-filament rectifier. The approximate voltage drop in the tube is 10 volts, the direct load voltage is of the order of 60 volts and the direct current load of the order 2 amperes for one and 6 amperes for the other of two standard types.

The copper oxide and cupric sulphide-magnesium oxide types of rectifiers consist of disc-like couples or junctures, held together under relatively high mechanical pressures. Rectifying action is accomplished by virtue of the difference in rate of electronic emission from the two materials, in close physical contact, through the oxide coating on one or more of the materials.

These rectifiers allow an appreciable amount of reverse current to pass, although the ratio of conductivity in either direction is of a high order. A typical cur-

Digitized by Google Original from UNIVERSITY OF MICHIGAN

rent-voltage curve of a copper oxide type rectifier is shown in the following illustration.

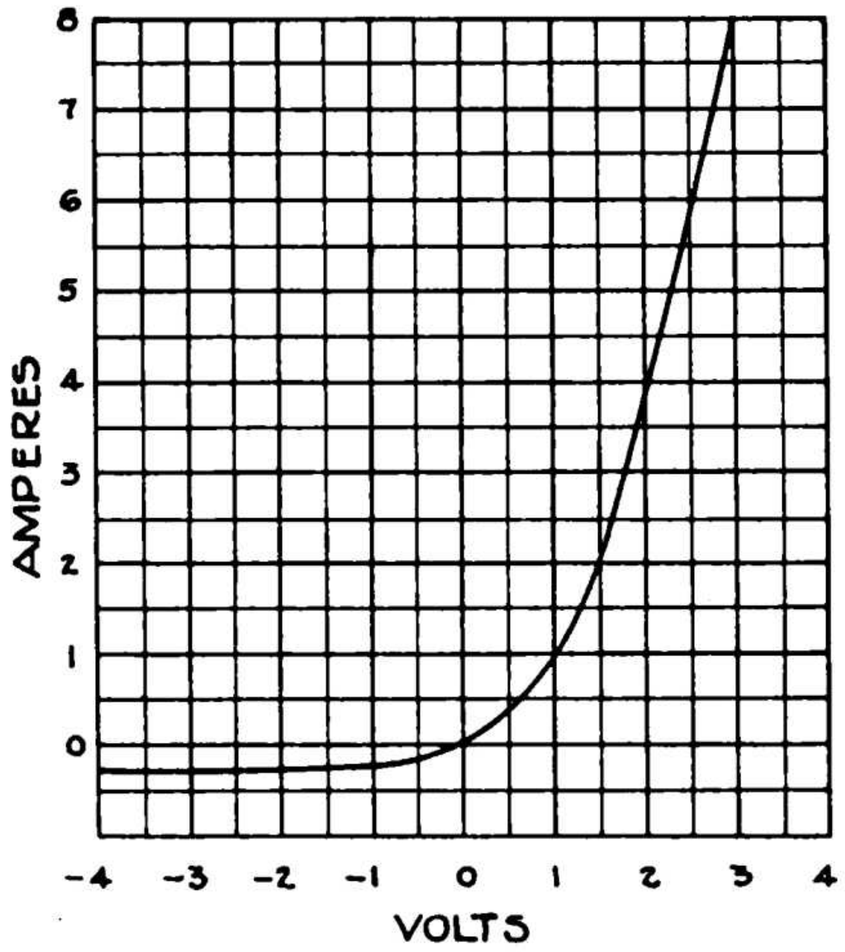

The tantalum-lead-sulphuric acid rectifier is a chemical or electrolytic device which consists of an oxide coated tantalum anode immersed in an electrolyte of sulphuric acid. A lead cathode member is used to make electrical contact with the electrolyte. The rectifying action is identical with the action encountered in electrolytic capacitor structures.

The low-voltage high-current type of rectifier and accompanying filter network finds a wide field of application in connection with telegraph and telephone systems, railway signal systems, automatic timing and tabulating mechanisms, public address systems, talking moving picture installations, burglar and fire alarm systems, photo-electric cell installations, radio broadcast stations and a large number of other applications where a relatively high direct current, at a relatively low voltage is needed.

Digitized by Google Original from UNIVERSITY OF MICHIGAN

The type of filter network is the same as those previously described except the required values of capacity range generally from 1000 to 5000 microfarads. Only choke-input types of filter networks are recommended for low-voltage rectifier service. This is primarily necessary because otherwise, the first capacitor C_1 may have too great a value of alternating current flowing through it and this may in turn result in destructive heating of the capacitor.

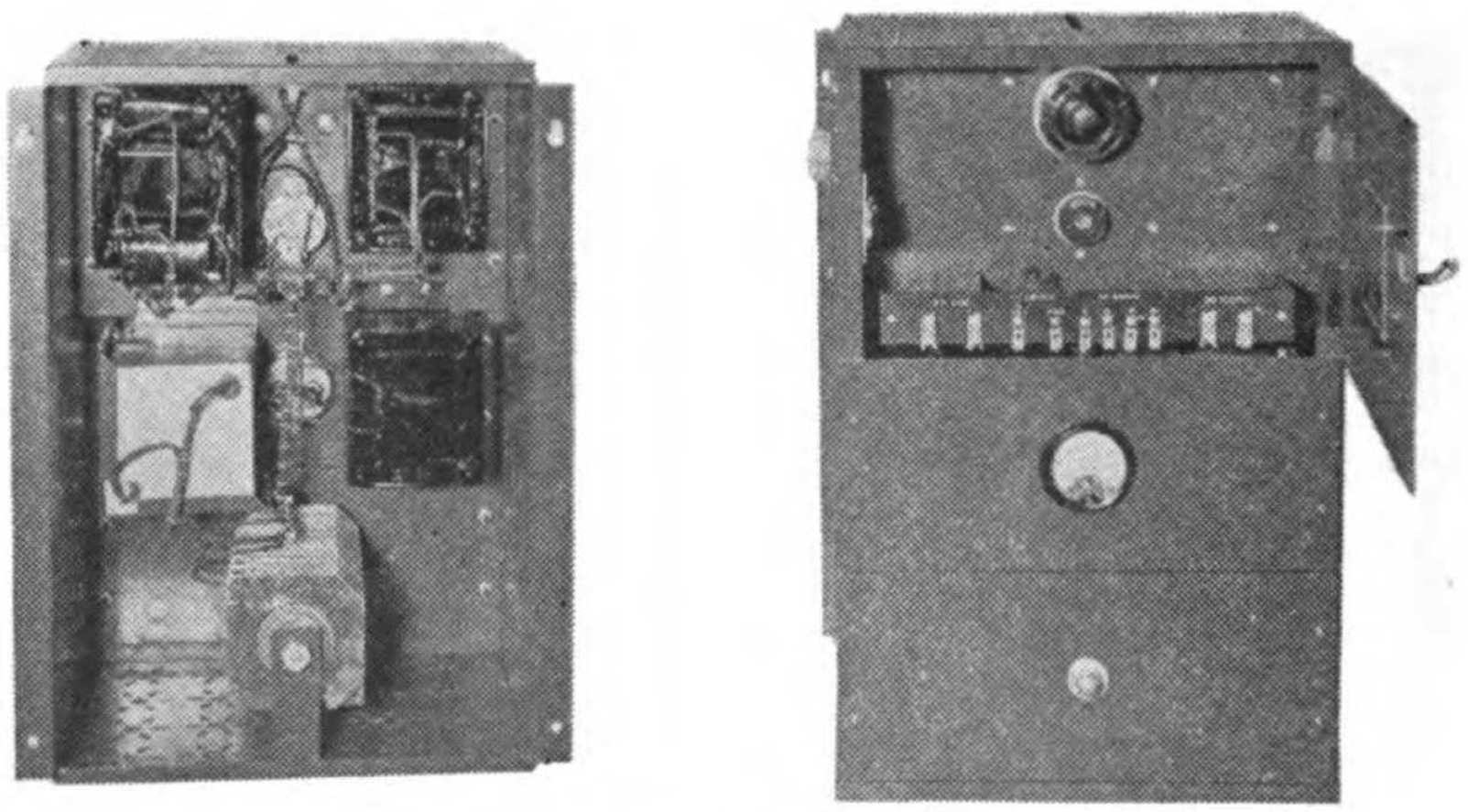

(Courtesy Raytheon Mfg. Co.)

24 volt direct current, one ampere battery eliminator used to operate telephone systems direct from alternating current. The filter circuit employs a low voltage—high capacity dry electrolytic capacitor. The capacitor is contained in an aluminum finished rectangular can and may be observed in the photograph to the left.

The circuit diagrams on page 231 are typical of those used in connection with the various types of low-voltage rectifiers.

Digitized by Google Original from UNIVERSITY OF MICHIGAN

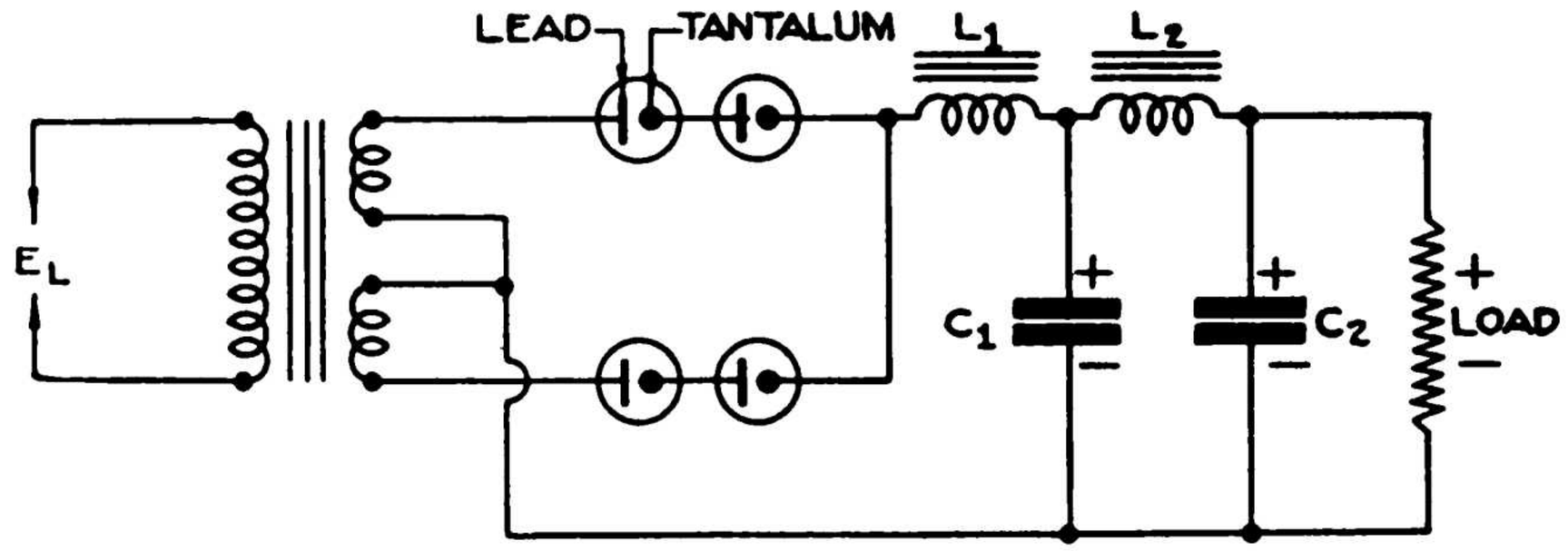

FULL-WAVE TANTALUM-LEAD RECTIFIER CIRCUIT

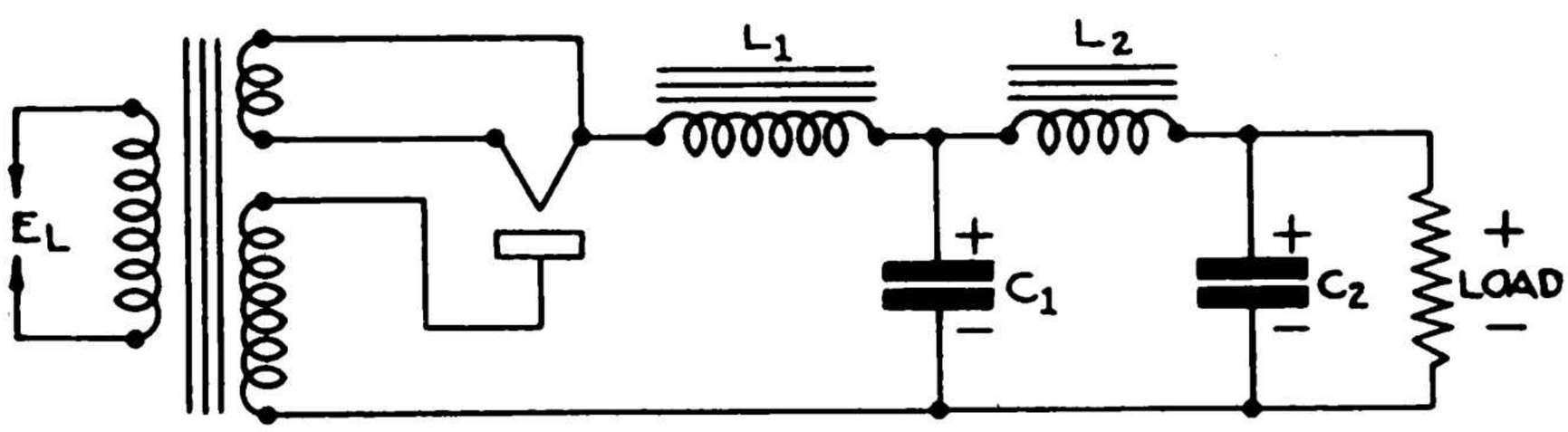

HALF-WAVE TUNGAR RECTIFIER CIRCUIT

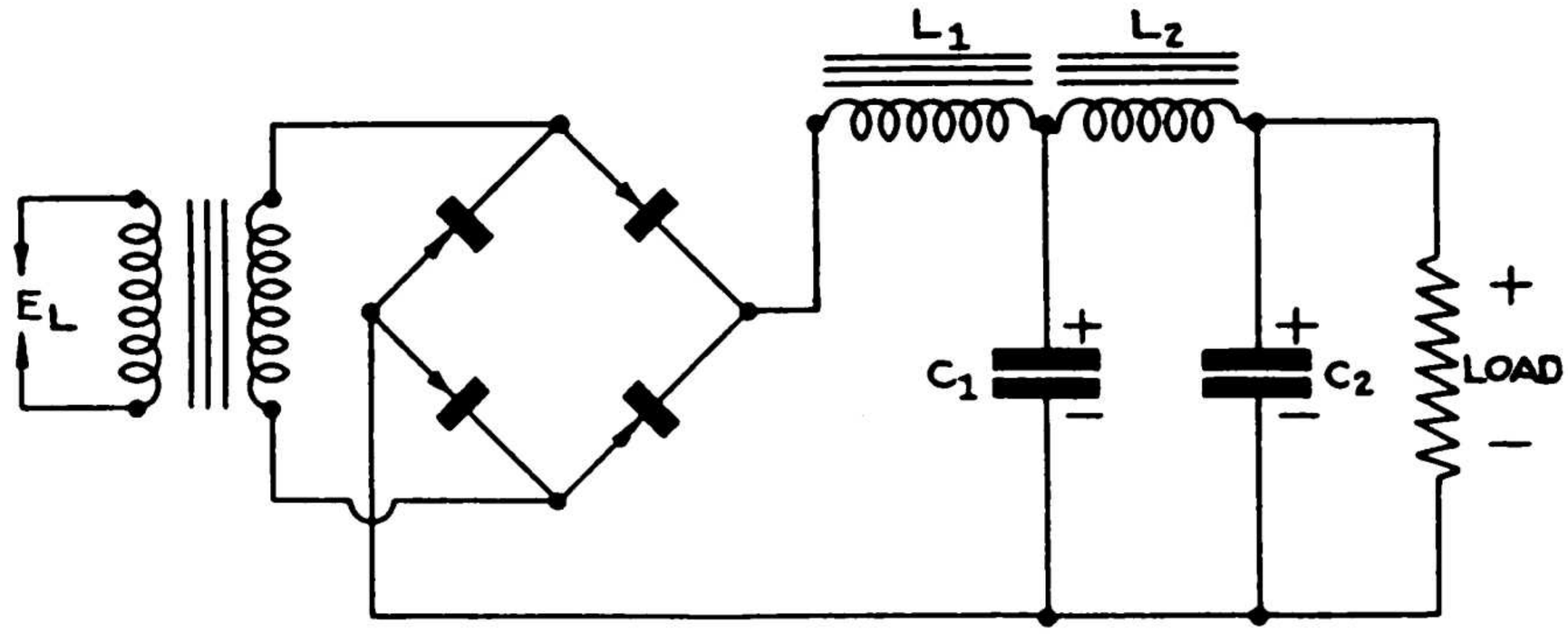

FULL-WAVE COPPER OXIDE RECTIFIER CIRCUIT

Additional Applications of Electrolytic Capacitors

Electrolytic capacitors are also in general use as by-pass capacitors to provide a comparatively low impedance path across cathode resistances which provide

Digitized by Google Original from UNIVERSITY OF MICHIGAN

grid biasing potentials for detector and audio amplifier tubes. A typical application of this type is illustrated in the following circuit diagram:

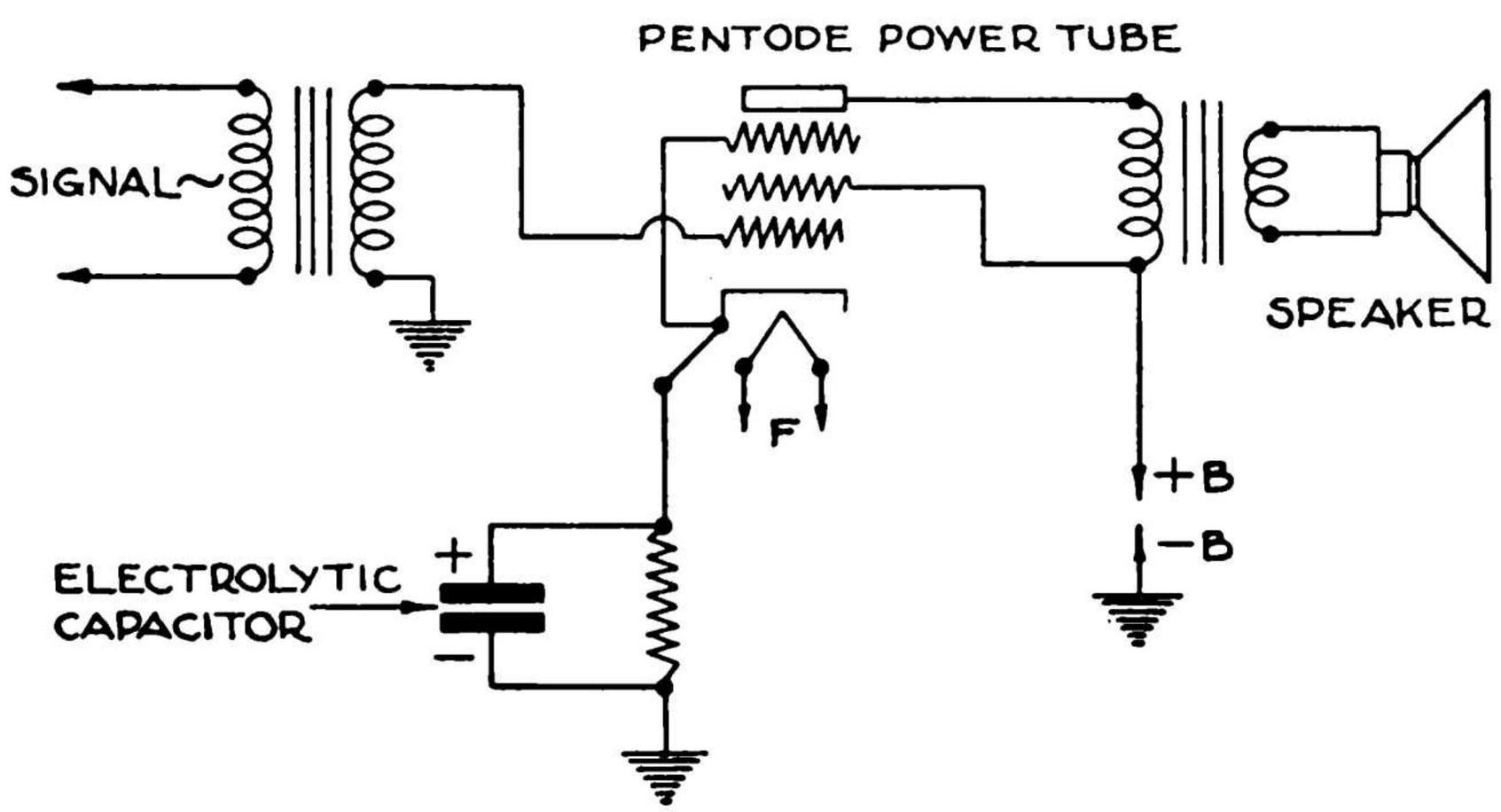

High capacity type electrolytic capacitors are also finding application as large direct current sources in connection with spot welding operations and the shock magnetization of permanent magnets.

Voltage Multiplication With Capacitors

There are certain types of voltage multiplying rectifier circuits, which incorporate the use of series connected electrolytic capacitors, wherein the capacitors are alternately charged from the rectifier source. A number of typical circuits of this type are shown in the following illustrations:

Digitized by Google Original from UNIVERSITY OF MICHIGAN

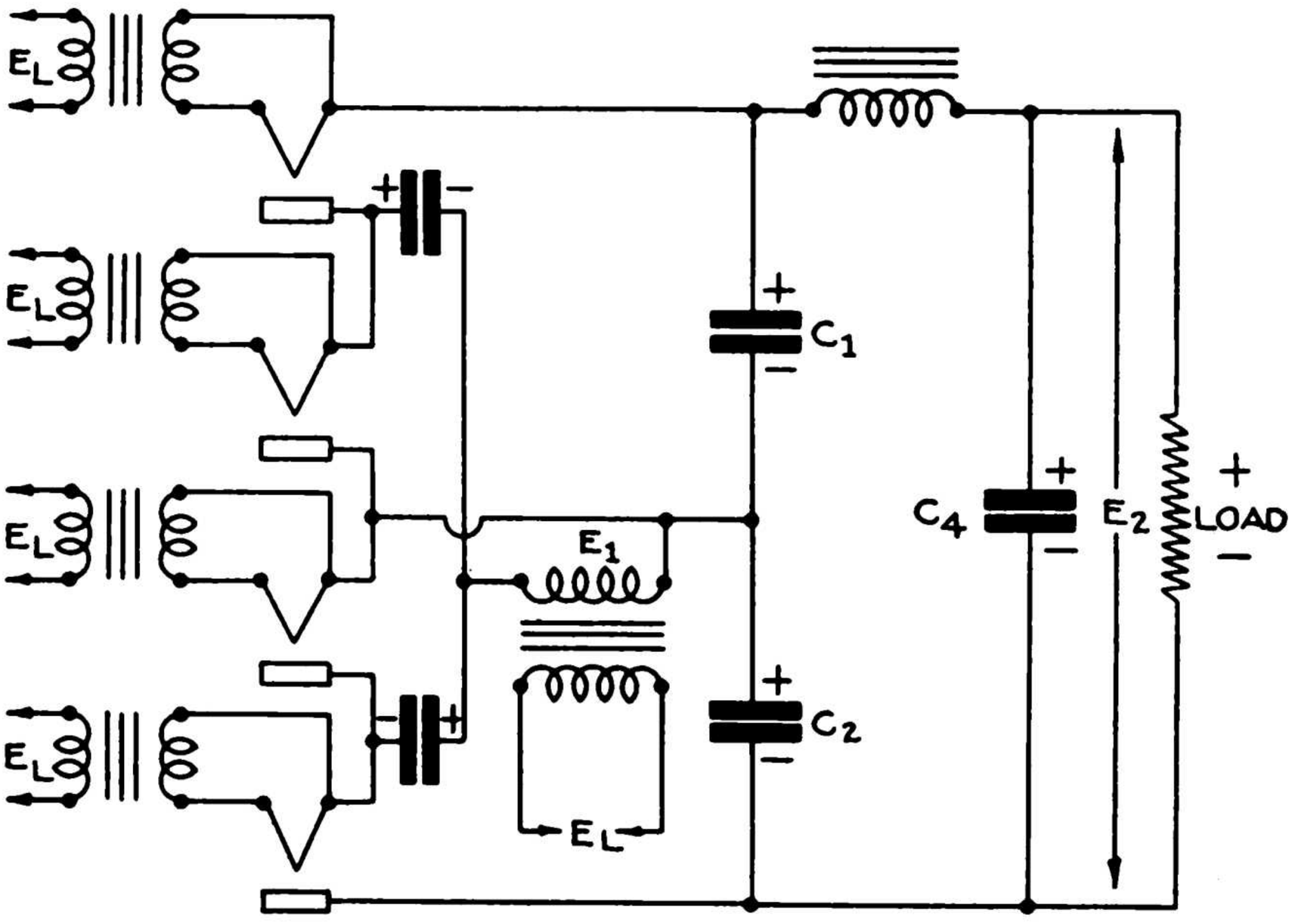

$E_2 = 4E_1$

HALF-WAVE VOLTAGE QUADRUPLER RECTIFIER CIRCUIT

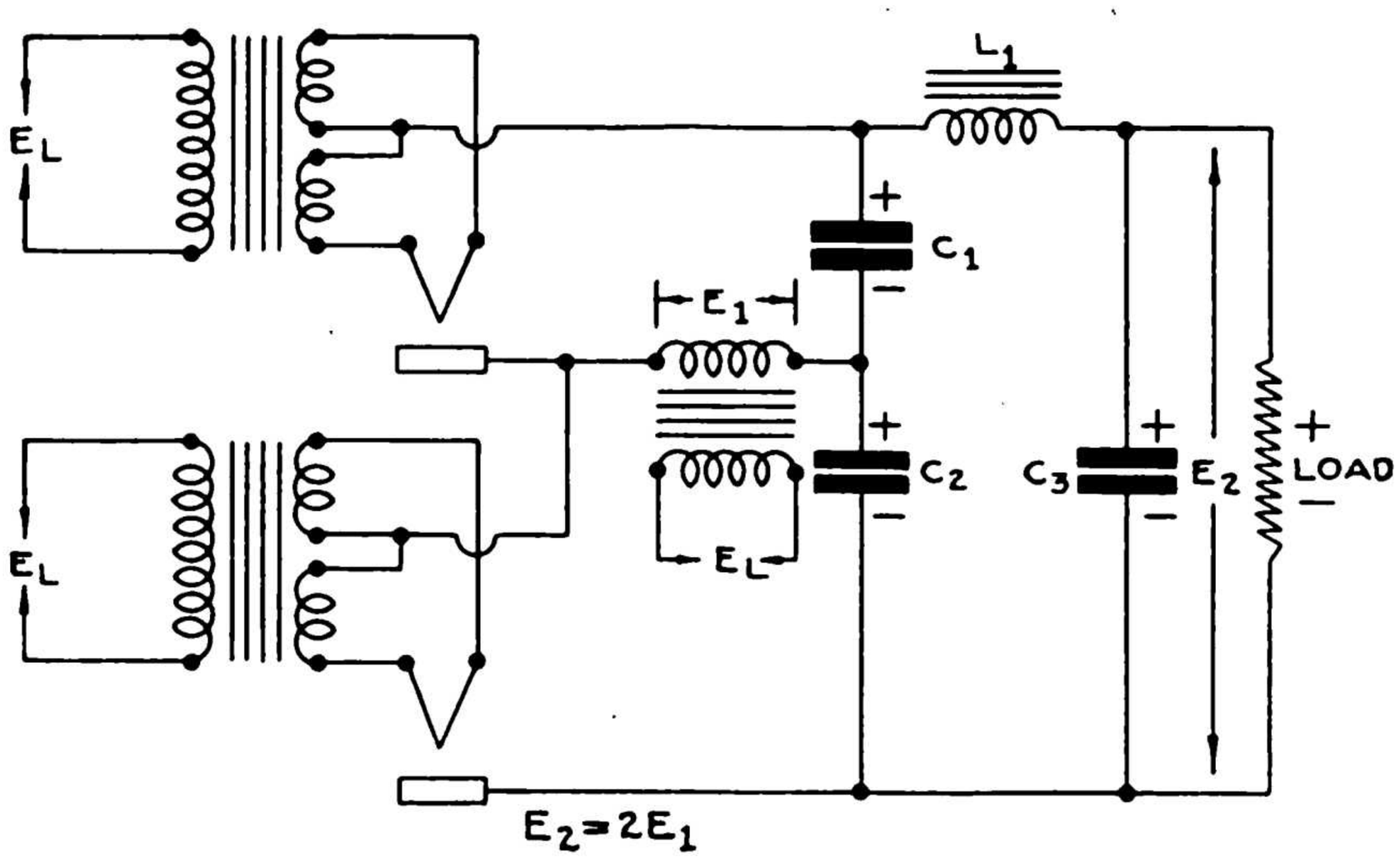

$E_2 = 2E_1$

HALF-WAVE VOLTAGE DOUBLER RECTIFIER CIRCUIT

Digitized by Google Original from UNIVERSITY OF MICHIGAN

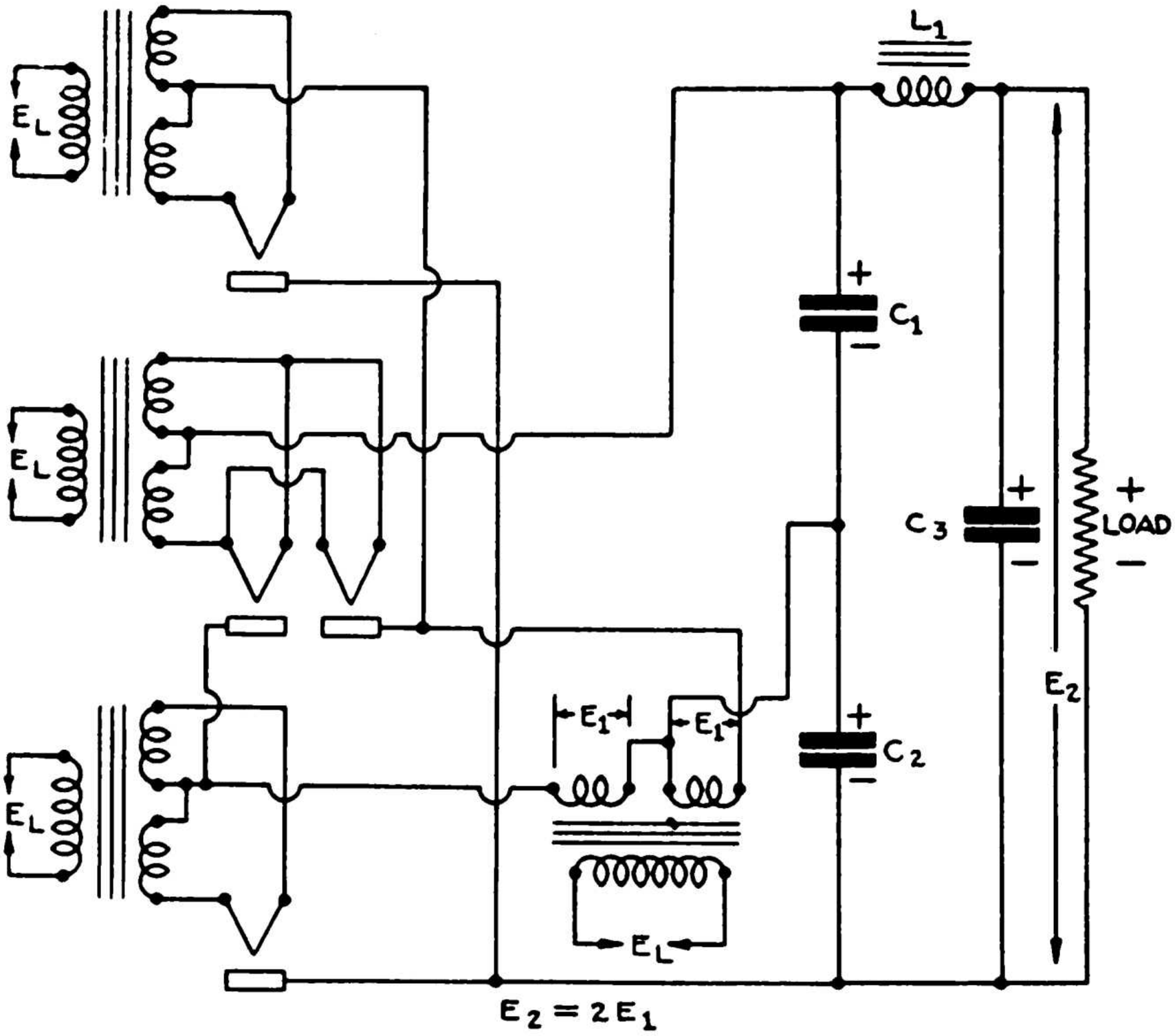

FULL-WAVE VOLTAGE DOUBLER RECTIFIER CIRCUIT

Digitized by Google Original from UNIVERSITY OF MICHIGAN

Chapter XVI

ALTERNATING CURRENT TYPE ELECTROLYTIC CAPACITORS

THE alternating current type of electrolytic capacitor is essentially different from the direct current type in that it is non-polarized. That is to say, it is composed of two electrodes, both of which are anodically filmed and immersed into an electrolyte common to both. In such a capacitor structure, each anode member functions alternately as such when it is positive with respect to the common electrolyte and likewise, each anode, which at the same moment is negative, functions merely to make electrical contact with the electrolyte.

Such a structure is represented by the following illustration:

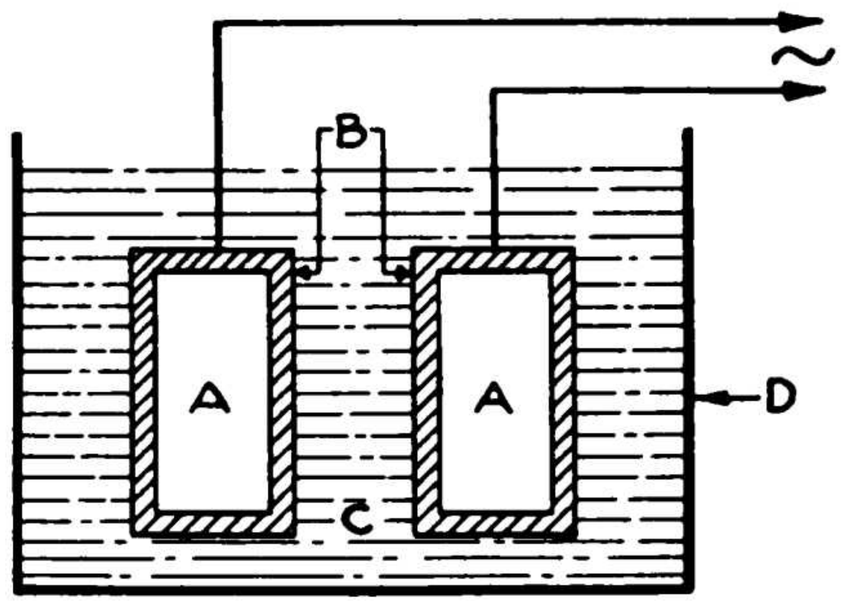

A = Aluminum anodes
B = Dielectric film
C = Electrolyte
D = Container

Digitized by Google Original from UNIVERSITY OF MICHIGAN

When two anodically filmed electrodes are immersed in an electrolyte a series connected, opposed arrangement of two asymmetric cells results. In some respects this is the same or equivalent of two mica or paper dielectric capacitors connected in series but the distribution of electrostatic charges is quite different from that obtained in the mica or paper dielectric capacitors due to the asymmetric properties of the anodic film. The potentials across the two anodic films, in an alternating current type electrolytic capacitor, are thus in opposition to each other, while, in the two series connected mica or paper dielectric capacitors the potentials across the individual dielectrics act in series.

The capacitor action of two series-opposed asymmetric cells results from the energy changes accompanying the variations in distribution of the constant charge held by the unit. Such an arrangement will not permit direct current to pass but alternating current will pass, producing a leading current in the circuit network in which it is incorporated.

If an electrolytic capacitor, consisting of two series-opposed asymmetric cells, is connected to an alternating current potential, current will flow until the impressed voltage on the cell has reached its maximum. One electrode of the cell then has maximum voltage applied to it and therefore has its maximum charge. As the potential decreases from its maximum value, the electrode which was positive begins to discharge into the circuit network and the charge which it held accumulates on the other electrode, thus making the other electrode positive. For any subsequent voltage variation the total coulomb charge remains constant for any

Digitized by Google Original from UNIVERSITY OF MICHIGAN

given maximum applied potential, whereas, in an ordinary mica or paper dielectric capacitor the charge varies with the applied potential.

The constant electrostatic charge existing in the cell sets up a uniform potential difference between the electrolyte, and any point outside the capacitor, in the external network, which is neutral with respect to the alternating current voltage. The electrolyte is always, therefore, negative, with respect to the neutral alternating current voltage reference point. The arithmetical sum of the voltages across the two anodic films is constant and equals the maximum voltage impressed on the capacitor terminals.

The algebraic sum of the instantaneous values equals the instantaneous value of the impressed voltage. The potential difference existing between the electrolyte and either anode is the resultant of a uniform voltage equal to one-half of the maximum instantaneous value of the voltage impressed on the cell, and an alternating current voltage equal to one half of the effective value of the voltage impressed on the cell. This is a pulsating unidirectional pressure. Each anodic film is therefore subjected to an alternating component equal to one-half the pressure impressed on the capacitor and each anodic film is subjected to the maximum pressure impressed on the cell, instead of one-half as is the case with two ordinary mica or paper dielectric capacitors connected in series.

As has been mentioned above, when the charge on one electrode is at maximum, the charge on the other electrode is zero. The energy therefore, which is stored at the maximum voltage is

Digitized by Google Original from UNIVERSITY OF MICHIGAN

$$W_1 = \frac{Q \quad E \quad (\text{Max})}{2}$$

Where Q is the charge in coulombs and *E* (Max) is the maximum voltage.

At the moment the applied voltage becomes zero, each anodic film holds one-half the charge at one-half the voltage and the stored energy becomes then equal to

$$W_2 = \frac{Q \quad E \quad (\text{Max})}{4}$$

The energy variation is therefore one-half the total energy stored in the capacitor when the maximum voltage is impressed on its terminals.

From this it can be seen that, whereas an electrolytic capacitor, consisting of two series-opposed asymmetric cells, stores and gives up only one-half of its total charge, an ordinary mica or paper dielectric capacitor stores and gives up its total charge. In other words, in the alternating current electrolytic capacitor one anodic film charges while the other discharges, while in the mica or paper dielectric capacitor both electrodes charge and discharge together.

In an alternating current type of electrolytic capacitor the two anodically filmed electrodes should be of the same electrostatic capacity. If the electrodes are not of the same electrostatic capacity, the charge stored in the capacitor will be independent of the capacity of the smaller electrode and will be determined solely by the maximum charge capable of being stored by the larger electrode. If one of the electrodes has a negligible capacity the unit no longer reacts in an alternating current network as an ordinary capacitor since it is able

Digitized by Google Original from UNIVERSITY OF MICHIGAN

to receive a charge but is unable to return it. Also in such a cell, the potential difference between the smaller electrode and the electrolyte may have, at least theoretically, a maximum value of twice the maximum voltage applied to the cell terminals.

The electrical equivalent of an alternating current or non-polarized electrolytic capacitor is that of two polarized or direct current electrolytic capacitors connected in series but in "back-to-back" or reverse order. Such an equivalent arrangement is shown in the following illustration:

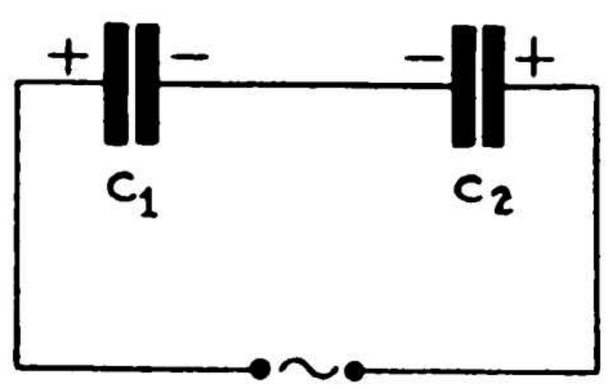

In such an arrangement the total effective capacity C of the combined capacitors is equal to

$$C = \frac{C_1 \quad C_2}{C_1 + C_2}$$

From this relation it is readily observed that in a non-polarized or alternating current electrolytic capacitor the total anode area, for a given voltage of dielectric film formation, must be four times as great for the same capacity obtained in a direct current or polarized electrolytic capacitor. In other words, the area of each anode in an alternating current electrolytic capacitor must be twice as great as the area of the anode in a direct electrolytic capacitor of a given capacity and voltage of anodic film formation.

Digitized by Google Original from UNIVERSITY OF MICHIGAN

The non-polarized or alternating current type of electrolytic capacitor is seldom produced in the wet electrolytic structures. The main disadvantages of the wet type of structure are: relatively large size, inherently high power factor, high cost, limited operating temperature range and operating position.

Because of these factors the dry electrolytic capacitor structures will only be considered as being of interest in this presentation.

A cross-sectional view of a dry electrolytic capacitor of the alternating current type is shown in the following illustration:

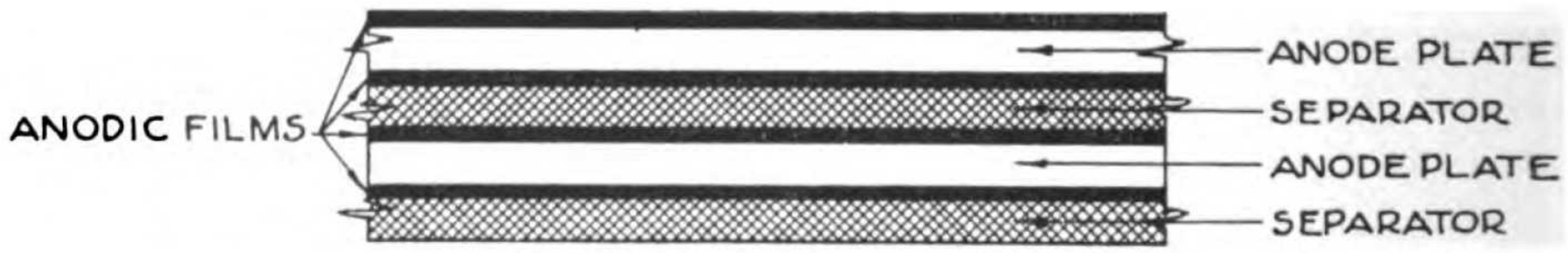

In the mechanical assembly or winding of the alternating current type of dry electrolytic capacitor the identical methods and procedures are employed which have been previously mentioned for the direct current types. The only basic structural difference is that the cathode foil of the direct current type capacitor is replaced with an anode foil in the alternating current type. There are, however, certain electrical characteristics which are required and for that reason special attention must be centered upon certain processes.

In the alternating current electrolytic capacitor a low power factor is not only highly desirable, as a general rule, but sometimes absolutely necessary. While comparatively low values of power factor can be ob-

Digitized by Google Original from UNIVERSITY OF MICHIGAN

tained, the lowest practical values still represent I^2R losses which are sufficiently great to limit the use of this type of capacitor structure to intermittent service only. Despite this limitation, the alternating current electrolytic capacitor finds a wide range of application; especially in connection with fractional horse-power, capacitor motors. Complete data on this phase of the subject will be found in later paragraphs.

Fabrication of A.C. Dry Electrolytic Capacitors

Anodic Members

Both plain foil and etched foil structures are equally satisfactory but in order to obtain a minimum value of equivalent series resistance it is highly essential that both etching and film forming processes be such as to minimize or eliminate the formation of layers of aluminum hydrate on the anode surfaces. Anodic films also must be only of the thin and active type.

In the formation of the dielectric films on anode foils for use in the alternating current type of capacitor structure, the relation between the potential of anodic film formation and the rated operation voltage must take into consideration the fact that working voltages are in root mean square values. In the calculation of required surface areas of anode foil for a specific capacity at a specific operating voltage, the following formula may be used:

$$A = E \times \sqrt{2} \times 1.15 \times C \times .026$$

Where

A = Area of anode foil in sq. inches
E = R.M.S. working voltage
C = Capacity in microfarads.

Digitized by Google Original from UNIVERSITY OF MICHIGAN

This formula applies only to plain foil so where etched foil is used, the indicated area is reduced in proportion to the gain in etching at a specific formation voltage.

The expression $E\sqrt{2}$ gives the aging voltage of the capacitor structure while the expression $E\sqrt{2} \times 1.15$ gives the potential of anodic film formation. This however will vary slightly with various formation electrolytes and formation procedures. The foil areas required, as a general rule, are shown in the following illustration:

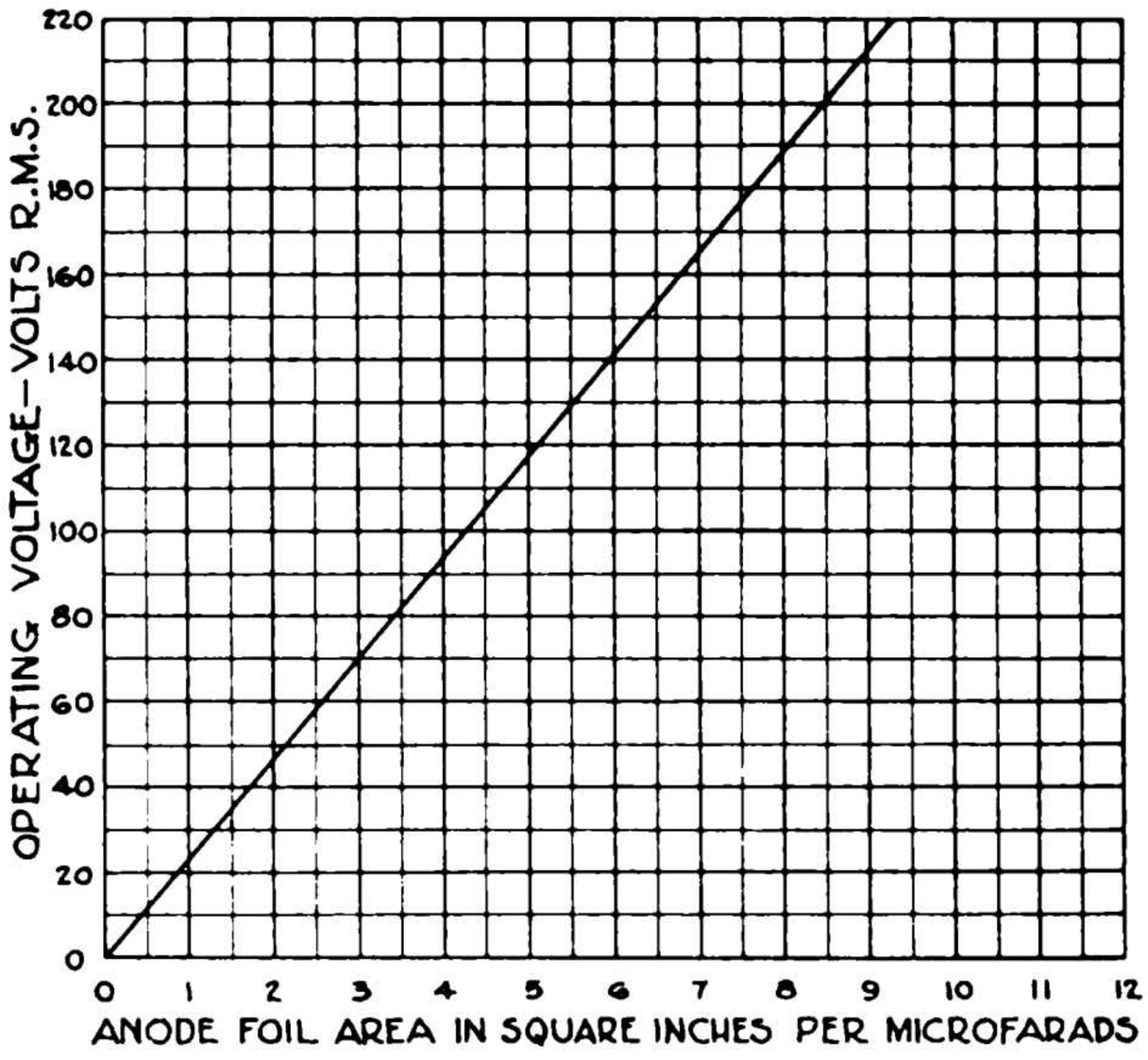

Separator Material

Either cellulose, gauze or combinations of the two are usually employed although the present tendency is to employ cellulose separator materials of a thickness ranging from 0.004″ to 0.006″ between anode foils.

Digitized by Google Original from UNIVERSITY OF MICHIGAN

Cellulose or other types of separator materials are selected for qualities of high absorption for electrolytes and high chemical purity.

Electrolytes

Electrolytes used in alternating current electrolytic capacitor structures may be of various types chemically, but, as a general rule, are physically of a more or less liquid or fluid nature. There are two reasons for this; one is that the capacitors are large physically and therefore more difficult of impregnation and the other is that lower values of equivalent series resistance can be obtained with the more liquid type electrolytes. Obviously, the more liquid electrolytes will more readily saturate the separator material and penetrate, for example, the minute, capillary like indentations of etched foil surfaces.

Containers

Due to the generally liquid nature of the electrolytes employed, alternating current electrolytic capacitors are almost always housed or encased in round or rectangular containers made of aluminum. No attempt is made to insulate the electrolyte from electrical contact with the container. The containers are hermetically sealed and insulated externally. With the round aluminum container an external sleeve of wax or varnish impregnated cardboard is employed while with the rectangular aluminum container the insulation takes the form of a box or carton instead of the sleeve.

Digitized by Google Original from UNIVERSITY OF MICHIGAN

Another reason for this type construction is that alternating current electrolytic capacitors are, in service, subjected to rather high ambient temperatures. This condition, in combination with a fairly liquid electrolyte, would make it impossible to seal the electrolyte into the capacitor winding by the usual means of using sealing compounds or waxes.

Containers are equipped with sealed terminals and the portions of the terminals extending inside the containers and in contact with the anode plate tabs are almost always of aluminum. This is necessary to prevent corrosion from galvanic action which would occur wherever the electrolyte came in contact with junctures of dissimilar metals.



Component parts of a standard 110 volt, A.C., etched foil, dry electrolytic capacitor.



Comparison of physical sizes of standard 110 v., A.C., dry electrolytic capacitors of the plain foil and etched foil types. The larger capacitor is of the plain foil type.

(Courtesy Cornell-Dubilier Electric Corp.)

Digitized by Google Original from UNIVERSITY OF MICHIGAN

Aging

The alternating current electrolytic capacitor, due to its non-polarized structure, must be aged on direct current in the same manner as any other type of electrolytic capacitor but in both directions. In actual practice this is accomplished by simply reversing, periodically, the applied potential during the aging operation. The time rate of such a periodic reversal of polarity of applied potential is not relatively important, as long as sufficient time is allowed between reversals, for the voltage across the capacitor terminals to reach nominal values.

Testing of Alternating Current Types of Electrolytic Capacitors

In the testing of alternating current types of electrolytic capacitors, two characteristics are normally determined: the capacity and power factor. The direct current leakage is generally not ascertained as it is relatively not important as long as it does not exceed a value indicative of an incomplete anodic film formation. An excessive leakage current will, of course, increase the power factor in terms of an increased parallel resistance path.

Capacity and power factor determinations are made by the voltmeter, ammeter and wattmeter method, in accordance with the following circuit arrangement. This method is the most simple and effective and is therefore the only one generally used for making such alternating current determinations.

Digitized by Google Original from UNIVERSITY OF MICHIGAN

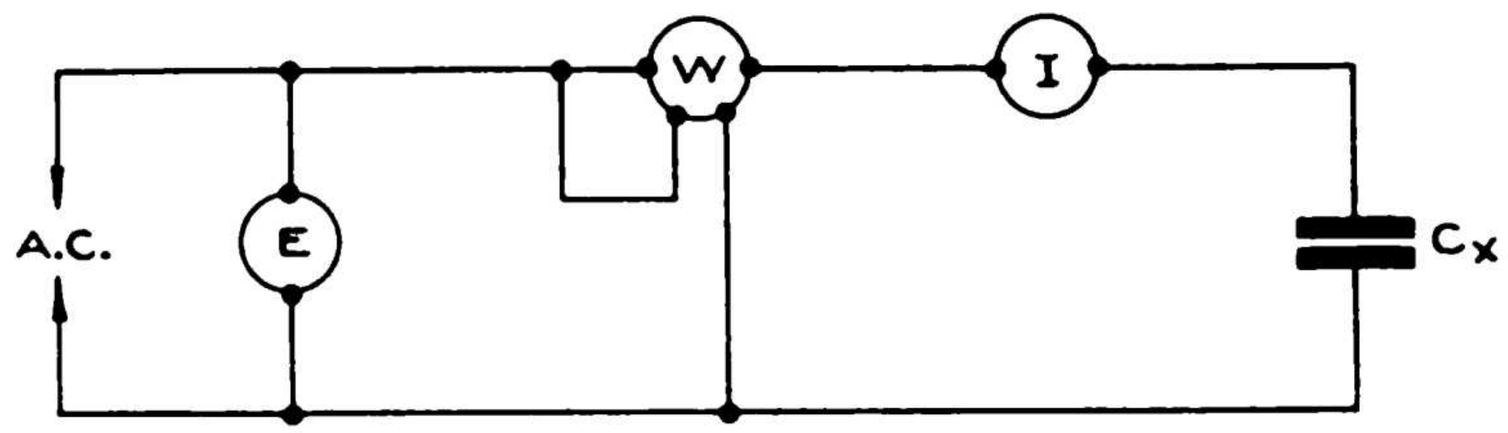

E—A.C. Voltmeter *W*—A.C. Wattmeter
I—A.C. Ammeter C_x—Capacitor under measurement.

To determine capacity and power factor values, the values of voltage, current and wattage are substituted in the following equations.

$$C_x = \frac{10^6}{2\ \pi\ f\ \sqrt{\left(\frac{E}{I}\right)^2 - \left(\frac{W}{I^2}\right)^2}}$$

Where C_x is the capacity in microfarads.

If power factor values are relatively low a rapid approximation of capacity may be made by using the following equation.

$$C_x = \frac{I \times 10^6}{2\ \pi\ f\ E}$$

Where C_x is in microfarads and f is the frequency in cycles per second.

$$\text{Power Factor} = \frac{W}{E\ I}$$

$$\text{Resistance} = \frac{W}{I^2}$$

At this point it is important to mention that considerable care must be exercised in the selection of a wattmeter for use in making measurements in connec-

Digitized by Google Original from UNIVERSITY OF MICHIGAN

tion with capacitors. In this respect, attention is called to the fact that the current drain through the wattmeter is, or may be, much greater than would normally be expected for the wattage reading obtained. For higher capacity values at relatively low power factor values, specially designed wattmeters must be employed.

Characteristics of Alternating Current Dry Electrolytic Capacitors

Effects of Temperature Change on Capacity and Power Factor

The actual temperature characteristics of a given capacitor structure will, to a large extent, be determined by the composition of the electrolyte employed. The higher the conductivity of the electrolyte, the better will be the temperature characteristics. That is to say, the higher the conductivity of the electrolyte, the smaller the change in capacity and power factor with a given temperature change.

Actual effects of temperature change on a typical alternating current electrolytic capacitor structure are shown in the illustration on page 248.

The Effect of Over Voltage Application on Capacity and Power Factor

If capacity and voltage determinations are made at voltages lower or higher than the rated working voltage considerable variation will be encountered. If the applied voltage exceeds the rated working voltage,

Digitized by Google Original from UNIVERSITY OF MICHIGAN

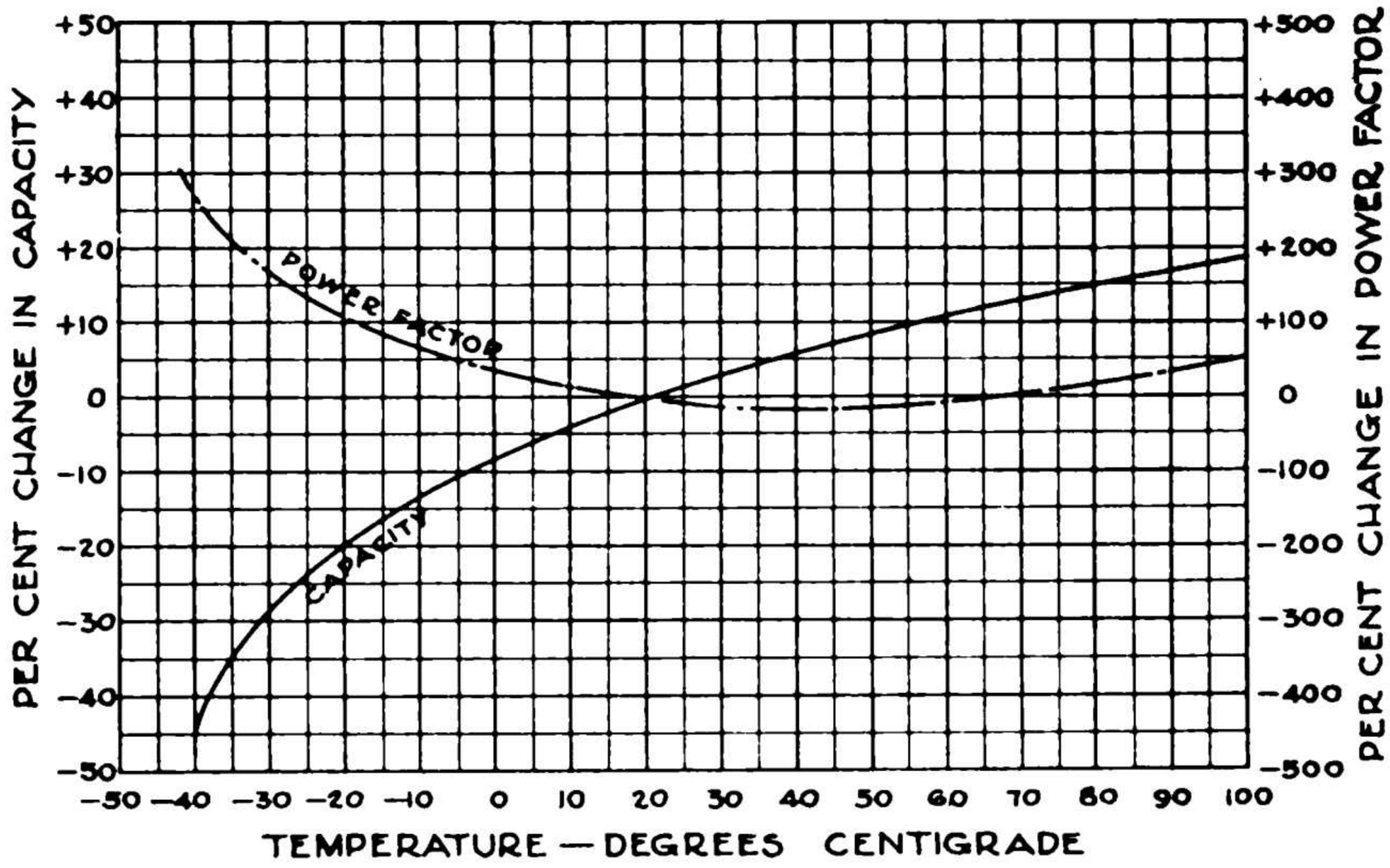

an increase in capacity and power factor will be obtained. If the reverse procedure is used and the applied voltage is lower than the rated working voltage, the capacity and power factor values will be materially

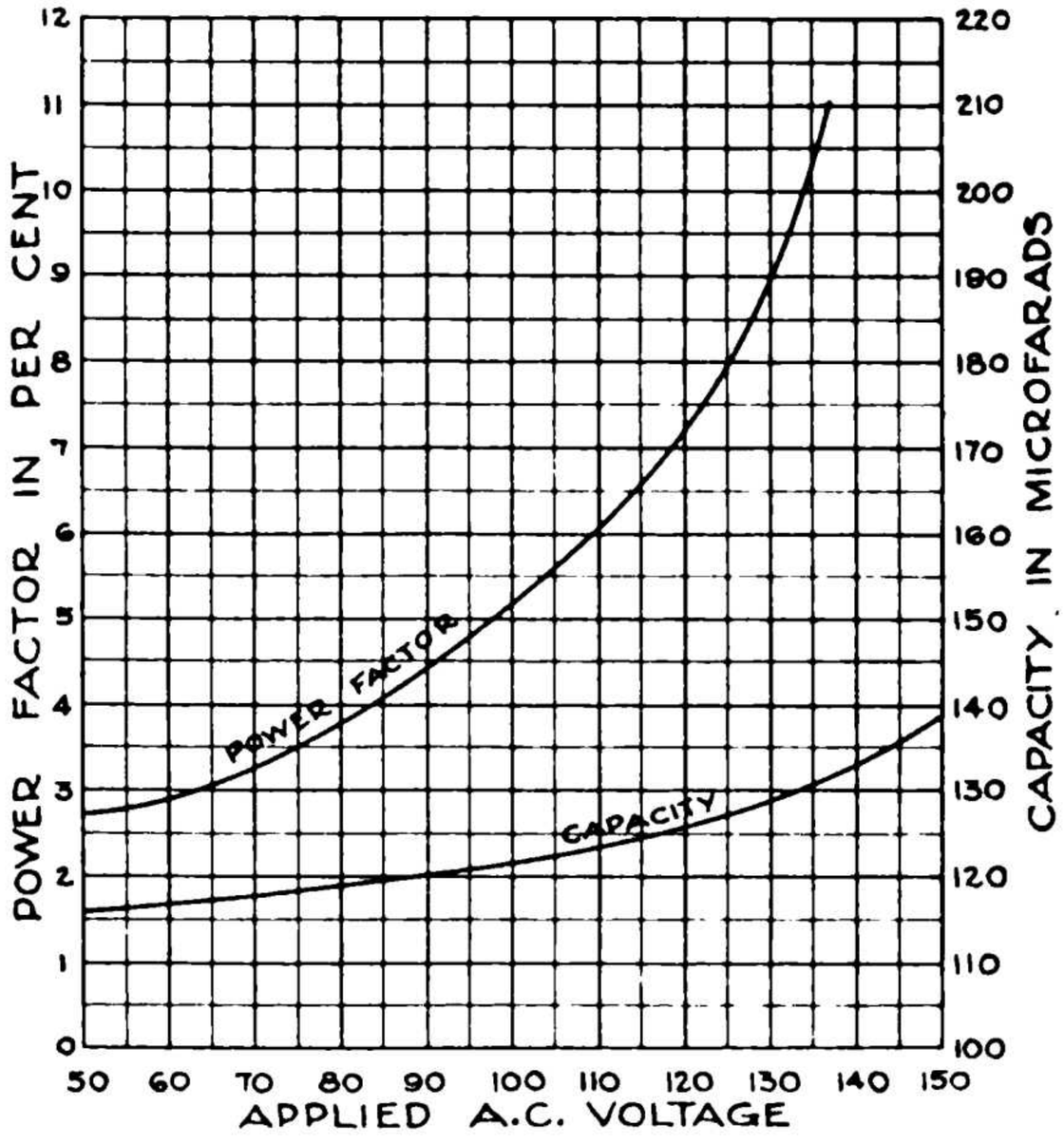

Digitized by Google Original from UNIVERSITY OF MICHIGAN

decreased. The graphically presented illustration at bottom of page 248 will show this relationship as applied to a standard 110-volt alternating current electrolytic capacitor.

The Effects of Idle Shelf Life on Capacity and Power Factor

As is typical with all dry electrolytic capacitors, idle shelf periods cause a certain hydration of the outer boundaries of the dielectric film which results in a momentary decrease in the film thickness. On initial application of voltage, the effect is an increase in power factor and capacity. Original values are, however, rapidly regained as the oxide film reaches its original state. This condition is, as a rule, more pronounced in alternating current electrolytic capacitor structures due to the fact that low power factor values require the use of electrolytes of the maximum conductivity. Such characteristics are shown in the following illustration:

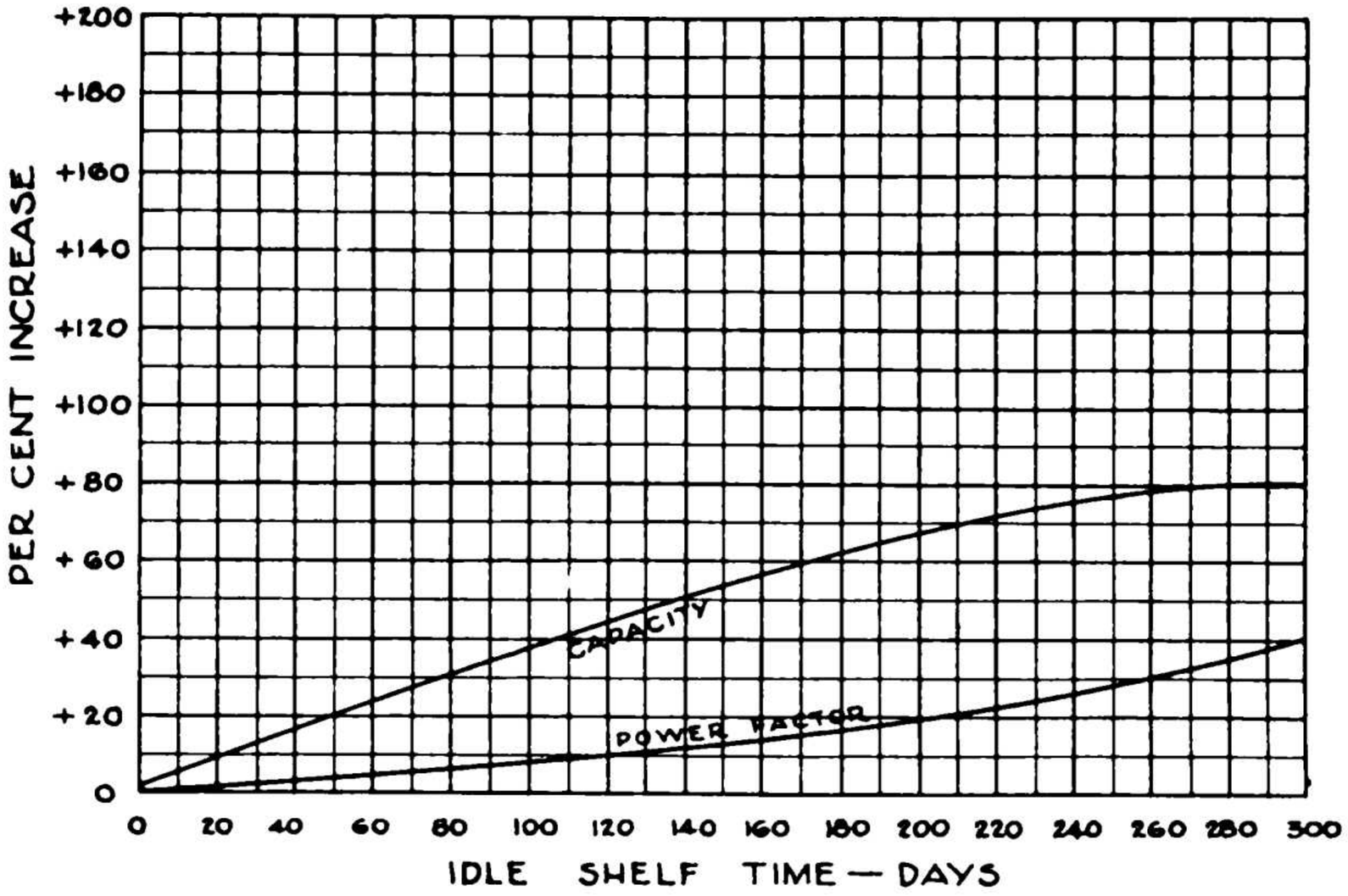

Digitized by Google Original from UNIVERSITY OF MICHIGAN

The Effect of Accelerated Test Conditions

In an effort to more quickly determine the effective life of an alternating current dry electrolytic capacitor structure recourse is frequently made to the use of so-called accelerated life tests. In actuality, the results obtained from such tests are not necessarily indicative of life because the conditions of such tests are not the same as those encountered in normal service. It must also be pointed out that the results from such a test are not entirely useful even for making comparisons between different capacitors unless they are of the same initial electrical characteristics. The following results show the effects of operation at an accelerated rate of voltage applications. The illustrated data is based on a test condition of one voltage application per minute of a duration of 3 seconds.

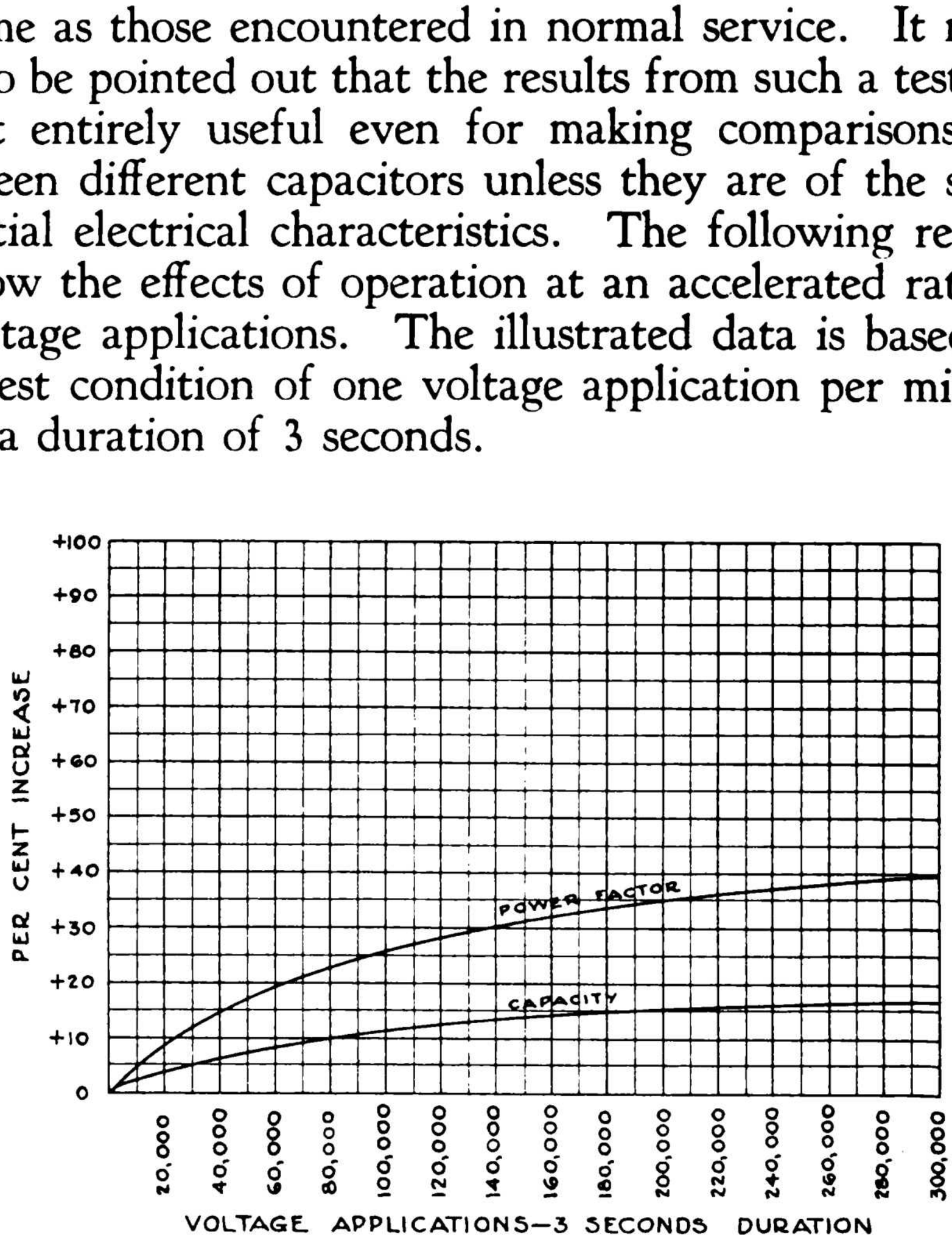

Digitized by Google Original from UNIVERSITY OF MICHIGAN

Applications of Alternating Current Types of Electrolytic Capacitors

The alternating current electrolytic capacitor has its greatest application in the capacitor motor field, in connection with starting duty, where the motor is operated under intermittent service conditions. This is particularly true in certain industries such as the fabrication of electric refrigerators, oil-burners, washing machines, radio dial controls, electrically driven pumps and compressors and similar fractional horse power motor operated devices.

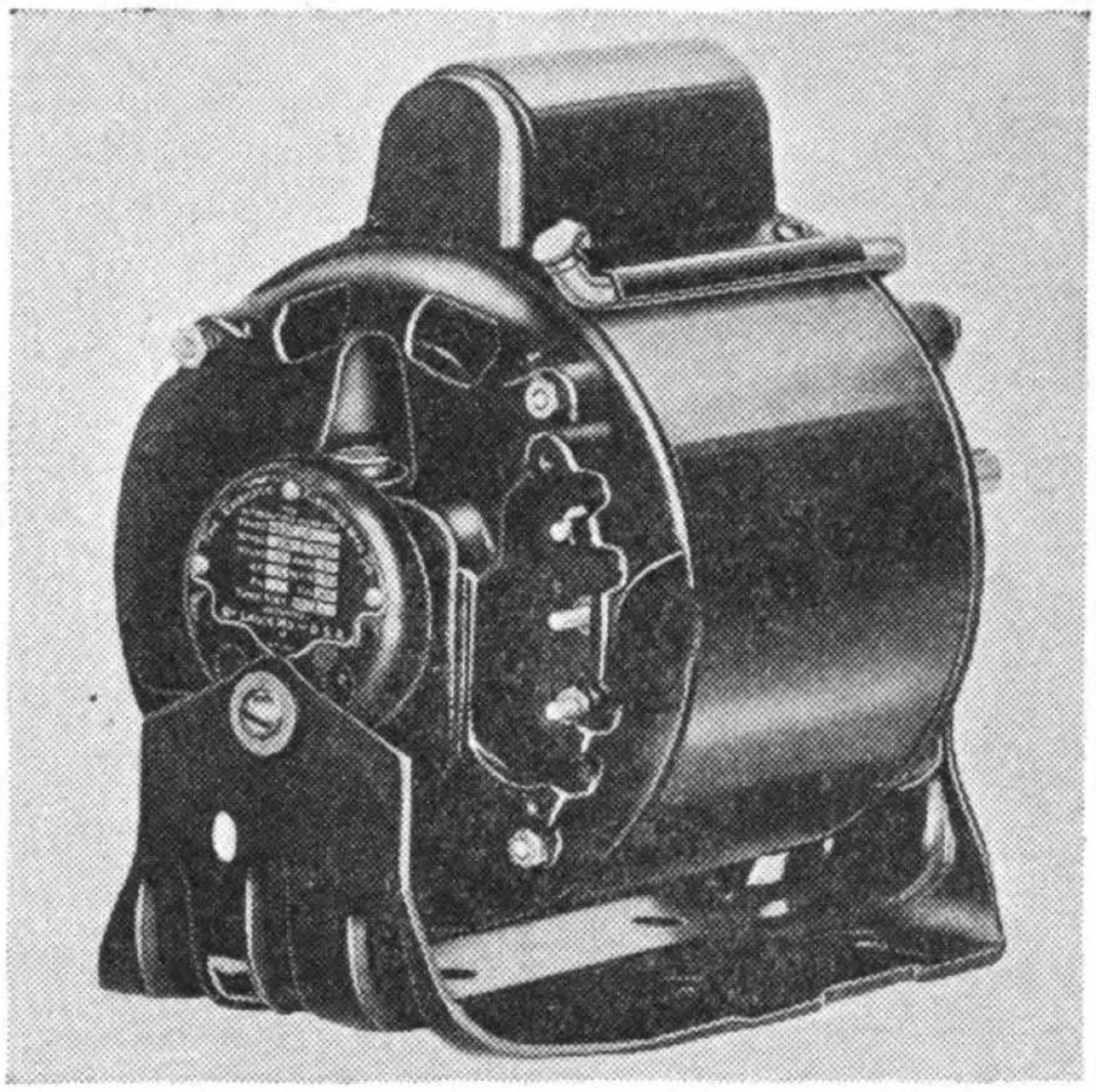

(Courtesy Emerson Electric Mfg. Co.)

Modern type of capacitor motor employing an etched foil, dry electrolytic capacitor. The capacitor is contained in the metal housing mounted on top of the motor.

The motor requirements for the average electric refrigerator call for a motor of special characteristics and among these characteristics is a starting torque of high magnitude. The capacitor motor admirably meets

Digitized by Google Original from UNIVERSITY OF MICHIGAN

such requirements but experience has shown that such a motor, to meet modern economic conditions, can only be produced by the employment of the dry electrolytic capacitor.

Fundamentally, and as far as construction is concerned, the single-phase capacitor motor is identical with the two-phase induction motor except that the windings are not necessarily alike and that an automatic switch must be provided to reduce the capacity of or entirely disconnect the capacitor when the motor has attained a certain speed of rotation. If an ordinary two-phase motor is connected with one winding directly across the power line and the other winding across the same line, in series with a capacitor, it will operate as a single-phase capacitor motor.

Although the turn ratios of the two windings may be different it is general practice to maintain the same total weights of copper in each winding. The rotor is identical with that of any poly-phase motor and is usually of the squirrel-cage type, although a wound rotor may be employed.

To obtain the highest efficiencies, the capacitor should be of a large capacity value when the motor is being started and this capacity value should be gradually reduced as the speed of the motor increases. Theoretically, the motor would operate precisely as a two-phase motor if the capacitor was adjusted to the exact proper value corresponding to each value of load and speed, the combination of the line and capacitor serving as a phase changer to convert the single-phase current supply to a two-phase supply.

Digitized by Google Original from UNIVERSITY OF MICHIGAN

Obviously, a continuously variable capacity is not at all practical. In practice, therefore, a fixed value of capacitance is satisfactory only if a starting torque of approximately 50 per cent of the full load running torque is sufficient. Such an arrangement is shown in the following circuit diagram.

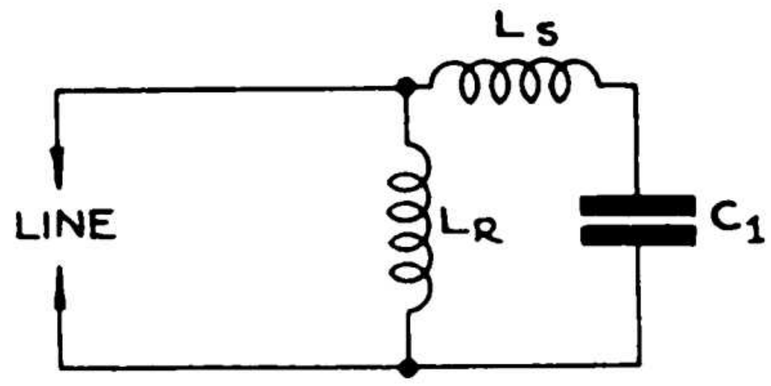

C_1—Capacitor
L_R—Running Winding
L_S—Starting Winding

Where a higher starting torque is desired, an additional capacitor is added, in parallel to the other capacitor, in the manner shown in the following circuit diagram.

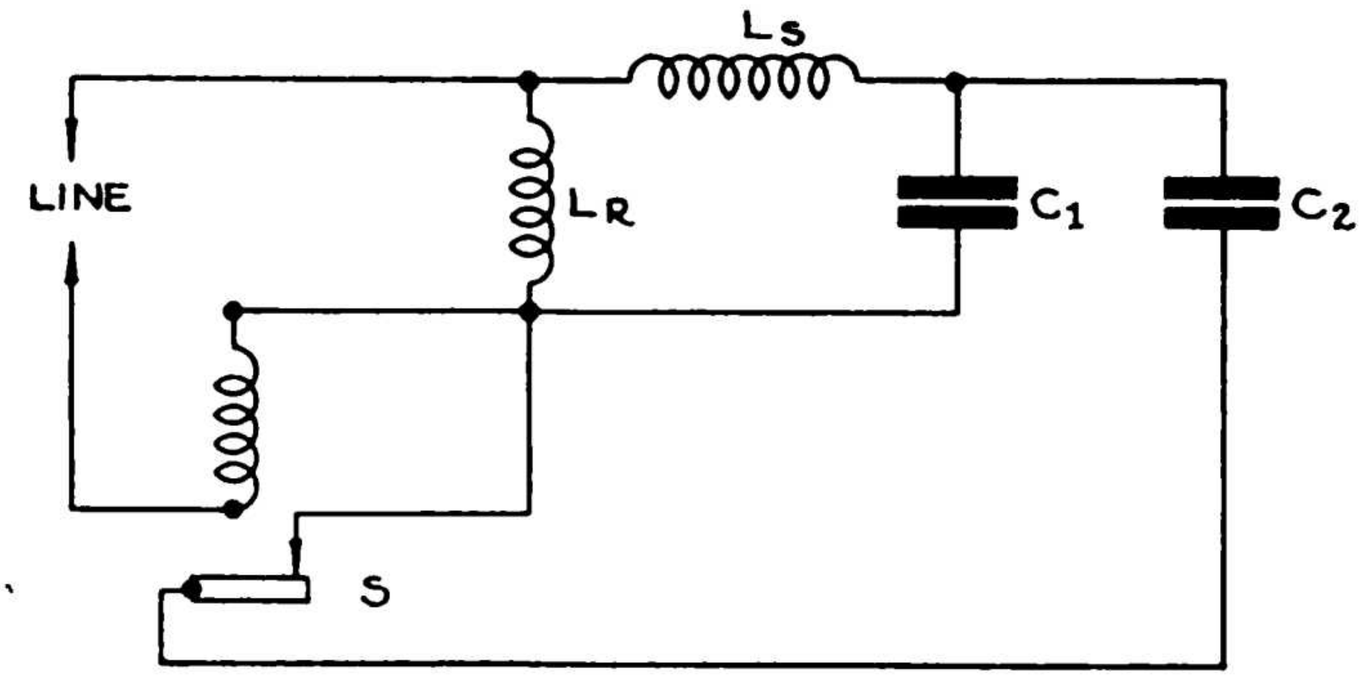

C_2—Capacitor
S—Gravity Type Relay Switch

The switch S operates to connect C_2 in parallel with C_1 during the first part of the starting cycle due

Digitized by Google Original from UNIVERSITY OF MICHIGAN

to the relatively large value of current flowing through the relay winding. As soon as the motor reaches full or nearly full speed the current through the relay winding becomes normal, the contact opens and the capacitor C_2 is disconnected from the circuit. The same results are obtained with the use of a centrifugally operated switch, the contacts of which remain closed when the motor is idle and which open automatically when the motor has attained a certain speed of rotation. Capacitor motors employing two values of capacity, a relatively large value for starting and a small value for running, are designated as capacity-start-capacity run type motors.

Capacitor type motors may be arranged for reversal of direction of rotation. Such an arrangement is shown in the following circuit diagram.

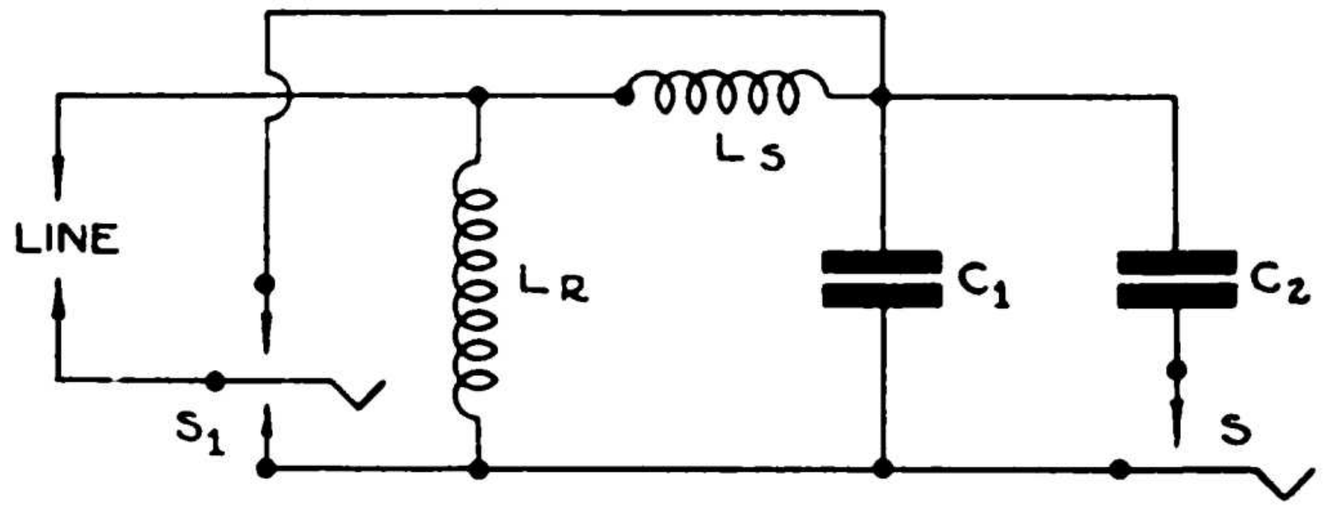

S_1—Reversing Switch

In this application, the direction of rotation is reversed by throwing the reversing switch S_1 in either position. It is obvious, that in such an arrangement, the running and starting windings must be electrically identical.

Due to the fact that electrolytic capacitors can be used in alternating current service only for intermittent

Digitized by Google Original from UNIVERSITY OF MICHIGAN

use, the capacitor C_1 is a relatively small paper dielectric capacitor.

In the type of service required in connection with electric refrigerator and similar motor applications, it is common practice to eliminate the use of capacitor C_1. With such an arrangement the motor is started as a capacitor motor but run only as a single-phase motor. In this case the capacitor is automatically disconnected from the circuit by a centrifugally operated switch or relay device, as soon as the motor attains a certain speed of rotation. The following circuit diagram shows such a typical arrangement.

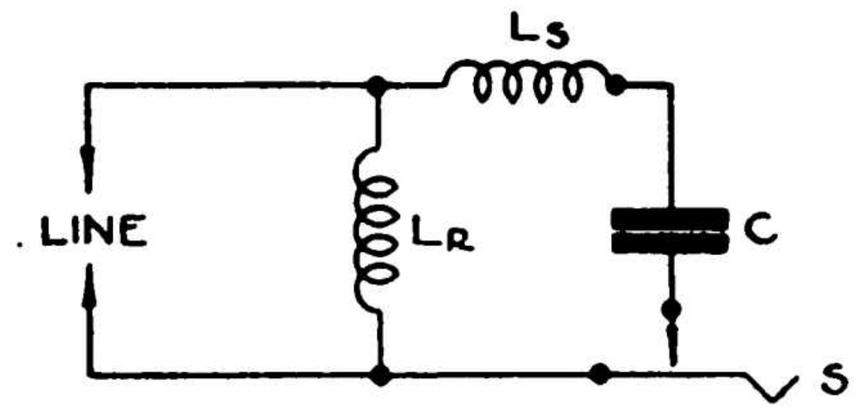

In starting performance, the capacitor start motor is actually superior to the two-phase motor. Since in the two windings one current leads and the other lags the combined total starting current is the vector sum of the two and is therefore less than their arithmetical sum. For the same reason the power factor is excellent and may easily be very near to 100 per cent.

The capacitor motor will develop even more torque than the two-phase motor and the current required is less. In fact, the torque per ampere may be nearly double that of a two-phase motor.

When the capacitor motor is operating at or near its full running speed, the rotating field is nearly uniform and the induced voltage in the starting winding

Digitized by Google Original from UNIVERSITY OF MICHIGAN

will be dependent upon the ratio of turns in the two windings. If the windings are alike, the voltage across the starting winding will be nearly equal to the line voltage, assuming that the resistance and reactance drops are the same in both windings. The voltage across the starting winding will be substantially 90 degrees out of phase with the voltage across the running winding.

The voltage across the capacitor is the vector sum of the line voltage and the voltage across the starting winding. If the turn ratio of the running to starting windings was one to one, the voltage across the capacitor would then be approximately 1.414 times the line voltage. With any other turn ratio the voltage across the starting winding and the capacitor would be changed proportionally. This factor must be given thorough consideration when selecting the proper voltage rating for the capacitor which is to be used with a given motor.

The Effect of Capacity Variation on Motor Starting Torque

For any particular motor design there is an optimum value of capacity required for maximum locked-rotor torque. Variations in capacity, either below or above this optimum value causes a reduction in torque produced. To illustrate this effect, reference is made to the following graph where torque is plotted against capacity. The motor employed was a standard 1/5 horse power, 110 volt, 60 cycle unit of well known make.

Digitized by Google Original from UNIVERSITY OF MICHIGAN

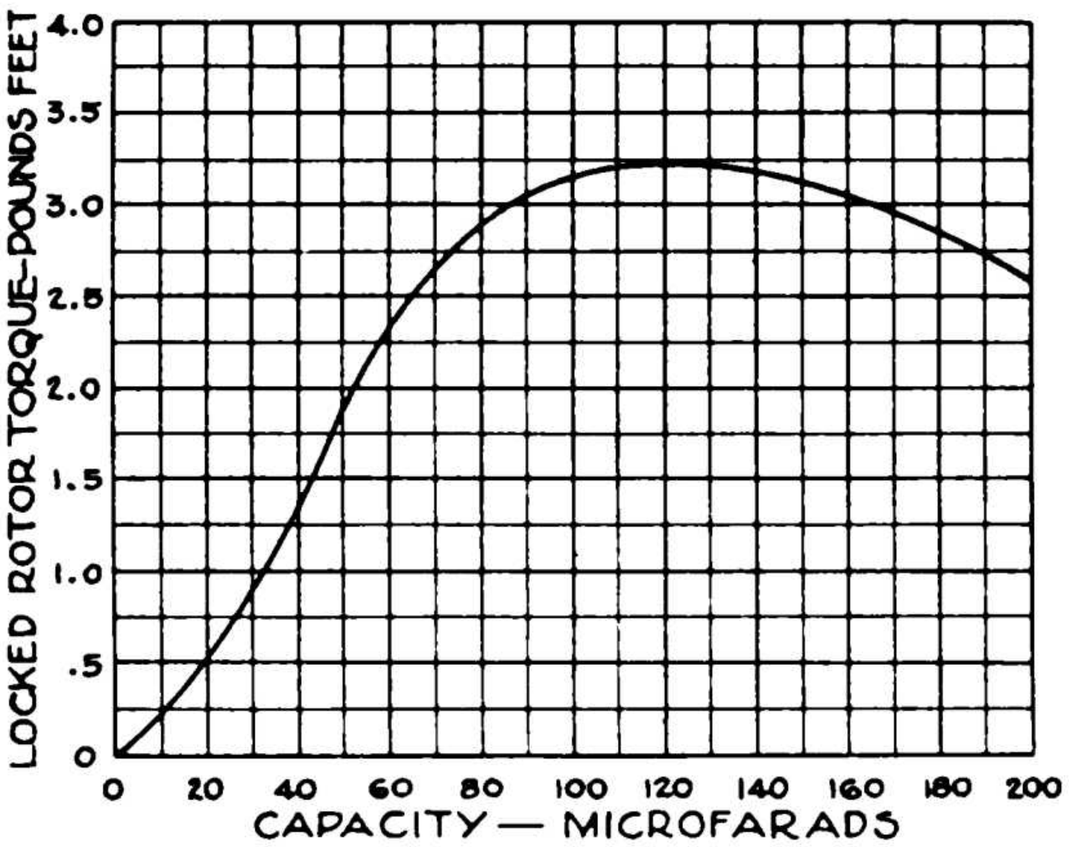

The Effect of Power Factor on Starting Torque

An increase in power factor results in a decrease in starting torque. This is caused by the resulting change in phase angle between the starting and running windings of the motor. The actual change in starting torque with increase in power factor is shown in the

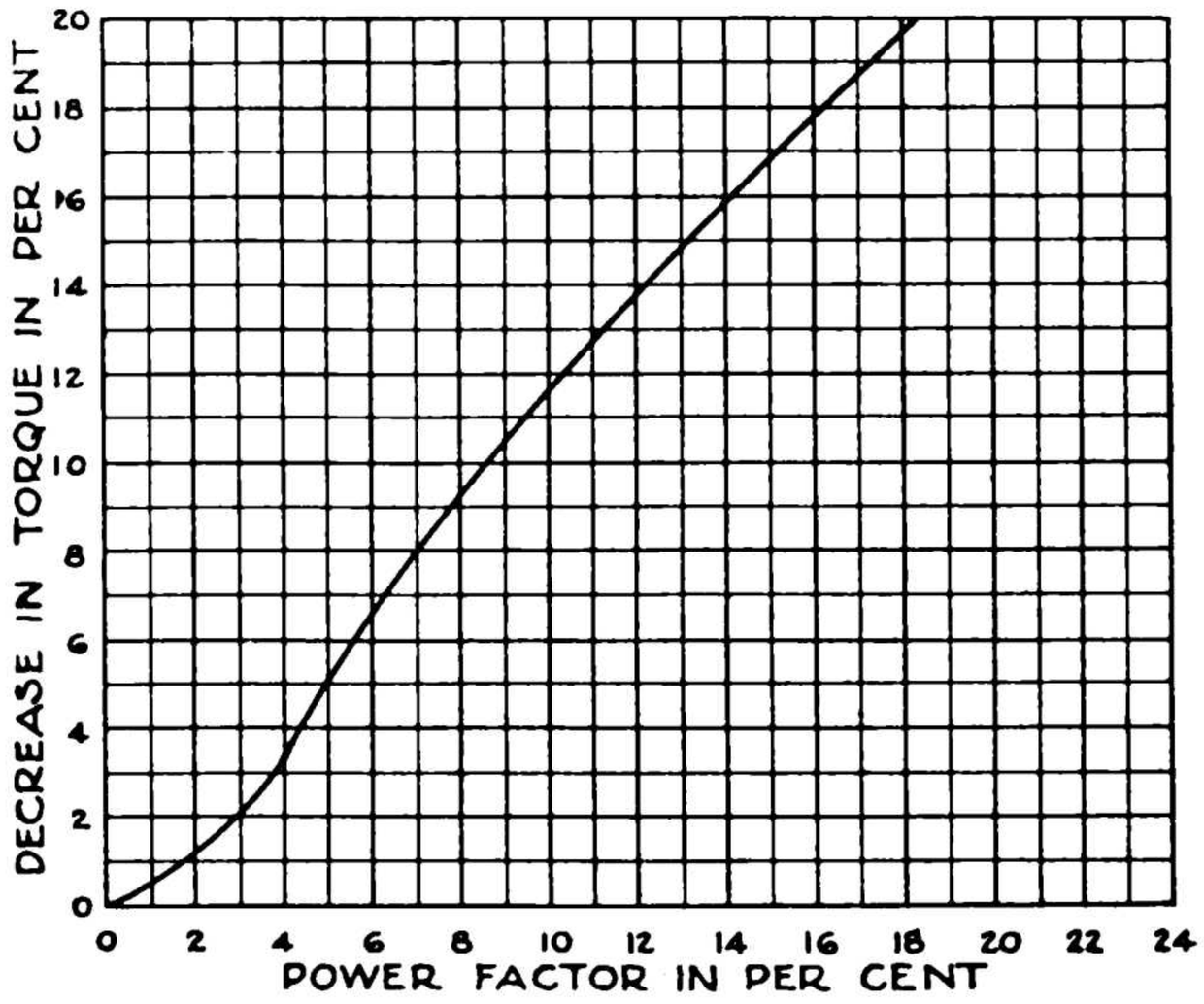

Digitized by Google Original from UNIVERSITY OF MICHIGAN

preceding illustration. In obtaining this data, the same motor was employed and the capacity value was maintained at the optimum point.

Operating Limitations

The alternating current, dry electrolytic capacitor is limited in application only by the power factor wattage loss and the ability of the physical structure to radiate the resultant heat generated. In other words, any given capacitor structure will withstand an increased number of voltage applications per minute as long as the generated heat is dissipated and the temperature of the structure does not rise above a definite equilibrium value. This equilibrium value of temperature should not, as a general rule, exceed 60 degrees Centigrade.

The capacitors employing etched foil anodes are greatly reduced in physical size so will not, therefore, stand as great a number of voltage applications per minute as will a capacitor employing plain foil anode members. The ratio of difference in the two types, for a given voltage and capacity rating, is substantially proportional to the difference in resulting physical dimensions.

Alternating current electrolytic capacitors, rated at not more than 25 volts, have in many instances been used for continuous voltage application but only in plain foil anode constructions and relatively low capacity values. Because of its general nature, it is doubted if dry electrolytic capacitors will ever be developed for continuous alternating current applications. A power factor of sufficiently low order to

Digitized by Google Original from UNIVERSITY OF MICHIGAN

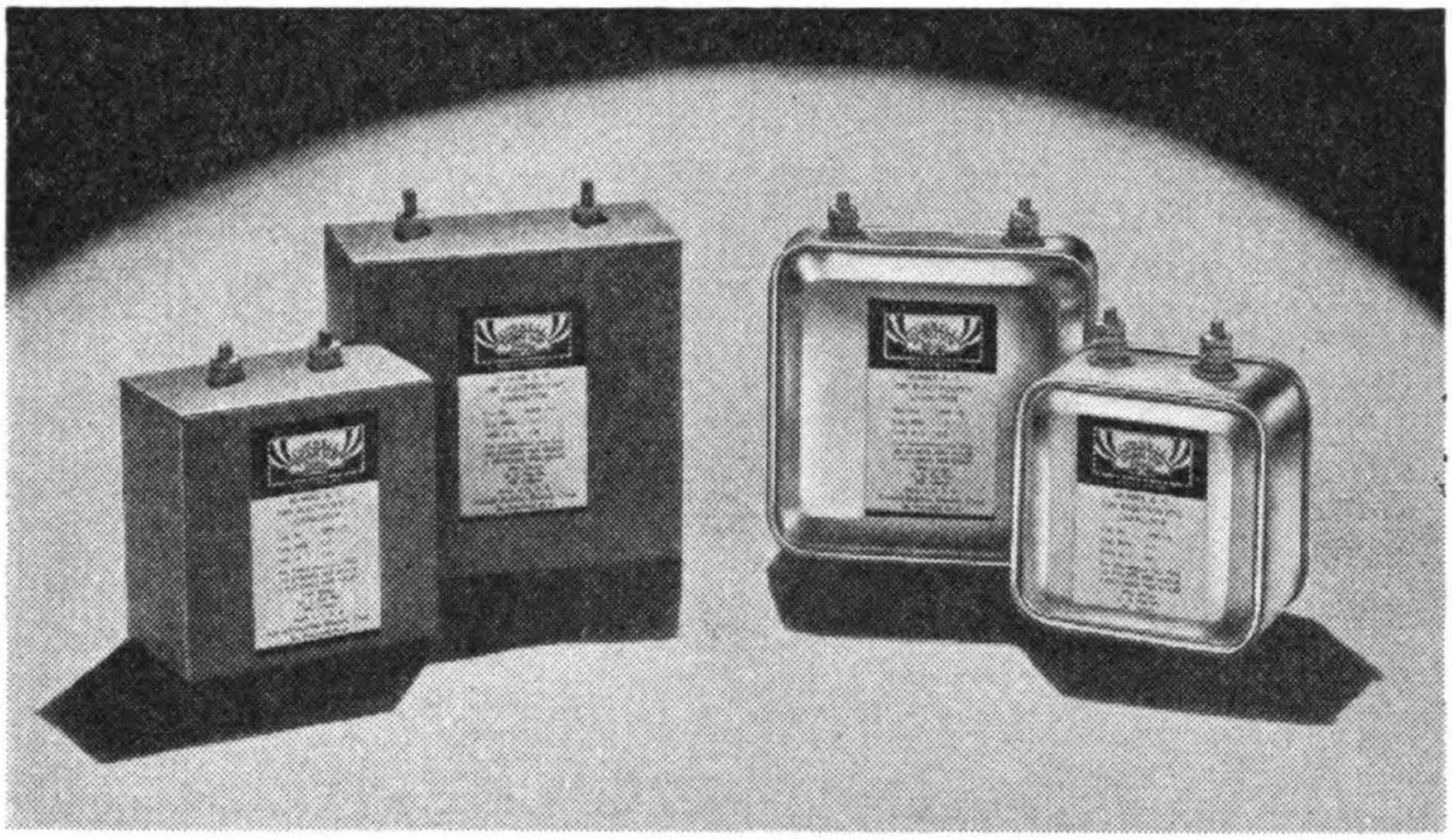

(Courtesy Cornell-Dubilier Electric Corp.)

Examples of standard, rectangular, aluminum can encased A.C. dry electrolytic capacitors with and without external insulating cartons.



(Courtesy Cornell-Dubilier Electric Corp.)

Examples of standard round aluminum can encased A.C. dry electrolytic capacitors.

Digitized by Google Original from UNIVERSITY OF MICHIGAN

eliminate the detrimental generation of heat is virtually impossible to obtain.

While the majority of applications of alternating current types of dry electrolytic capacitors lie in the 110 volt, 60 cycle class of service, there are a substantial number of 220 volt applications. As a general rule however, 220 volt capacitors are constructed of two 110 volt sections connected in series as a protection against the application of high surge voltages frequently encountered in connection with 220 volt capacitor motors.

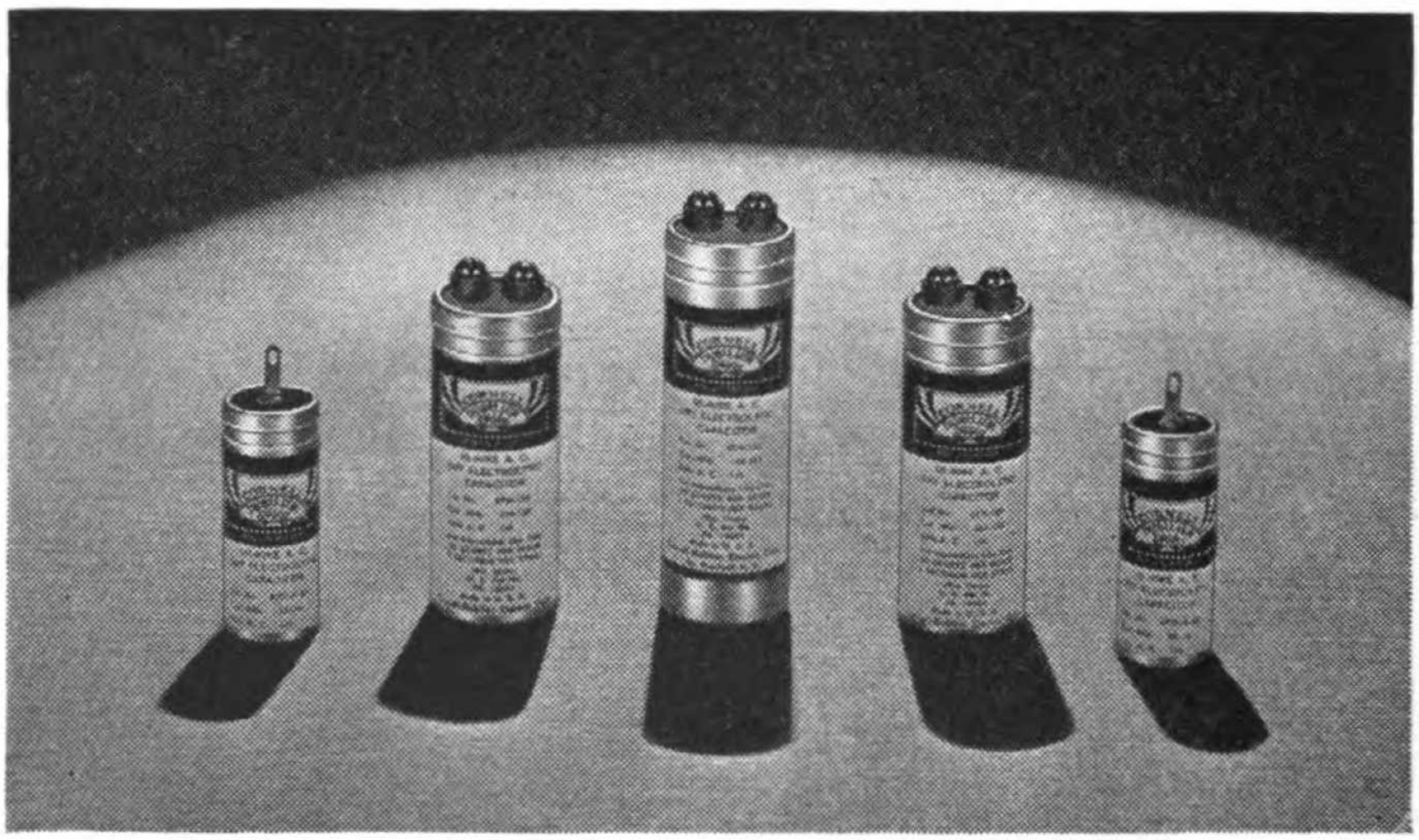

(Courtesy Cornell-Dubilier Electric Corp.)

Examples of standard round aluminum can encased A.C. dry electrolytic capacitors.

Digitized by Google Original from UNIVERSITY OF MICHIGAN

Chapter XVII

APPENDIX OF USEFUL INFORMATION

Measurement of Peak Voltages

IT IS frequently desired to measure peak voltages impressed on electrolytic capacitors where an alternating current component voltage is superimposed on the applied direct current voltage. A simple but effective peak voltmeter, useful for such measurements, is shown in the following circuit diagram.

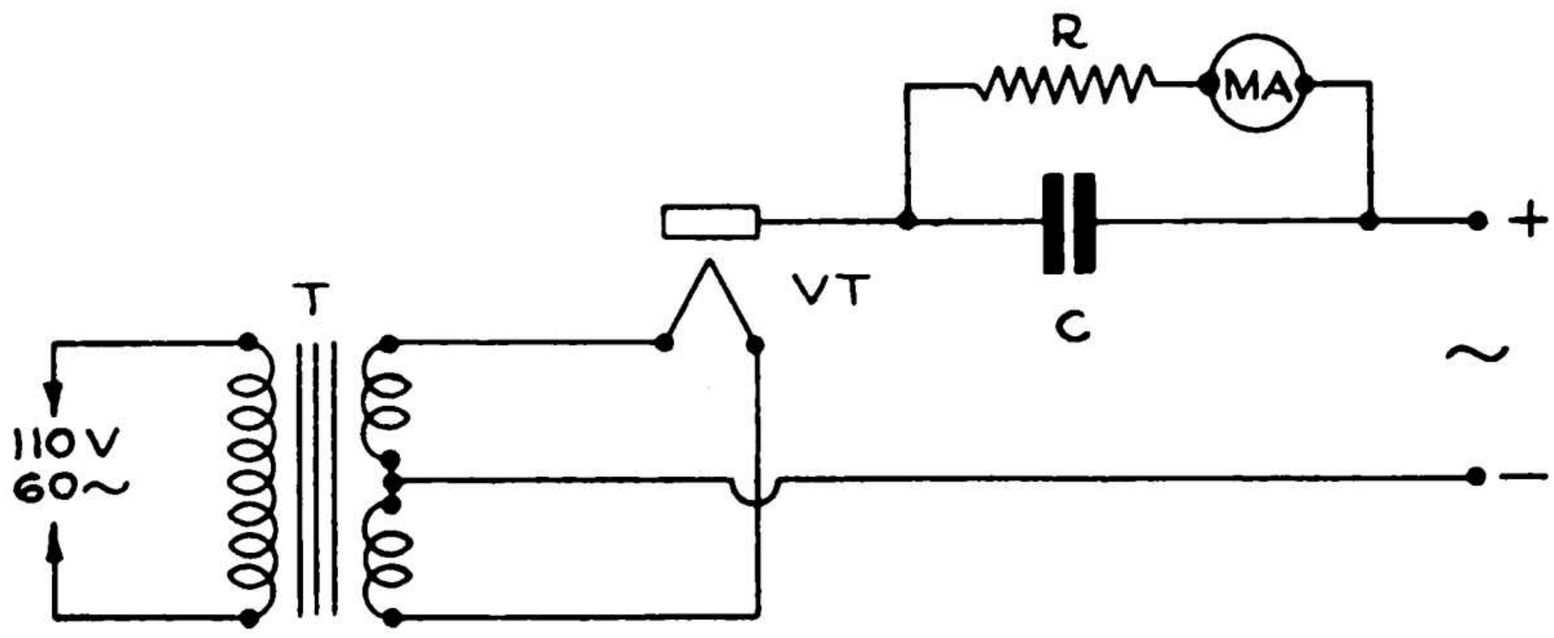

Legend:

T—Filament Transformer
VT—Type 81 Rectifier Tube
C—1 MFD. 1000 V. Paper Dielectric Capacitor
R—3,750,000 Ohm Resistor
MA—0-200 Microampere-Microammeter

The instrument may be accurately calibrated on direct current and subsequently used for the measurement of either direct current potentials or peak values of alternating current or complex current potentials.

Digitized by Google Original from UNIVERSITY OF MICHIGAN

The Measurement of Specific Resistivities of Electrolytes

A convenient resistance bridge for the determination of specific resistivities of electrolytes, distilled water, etc., is shown in the following circuit diagram.

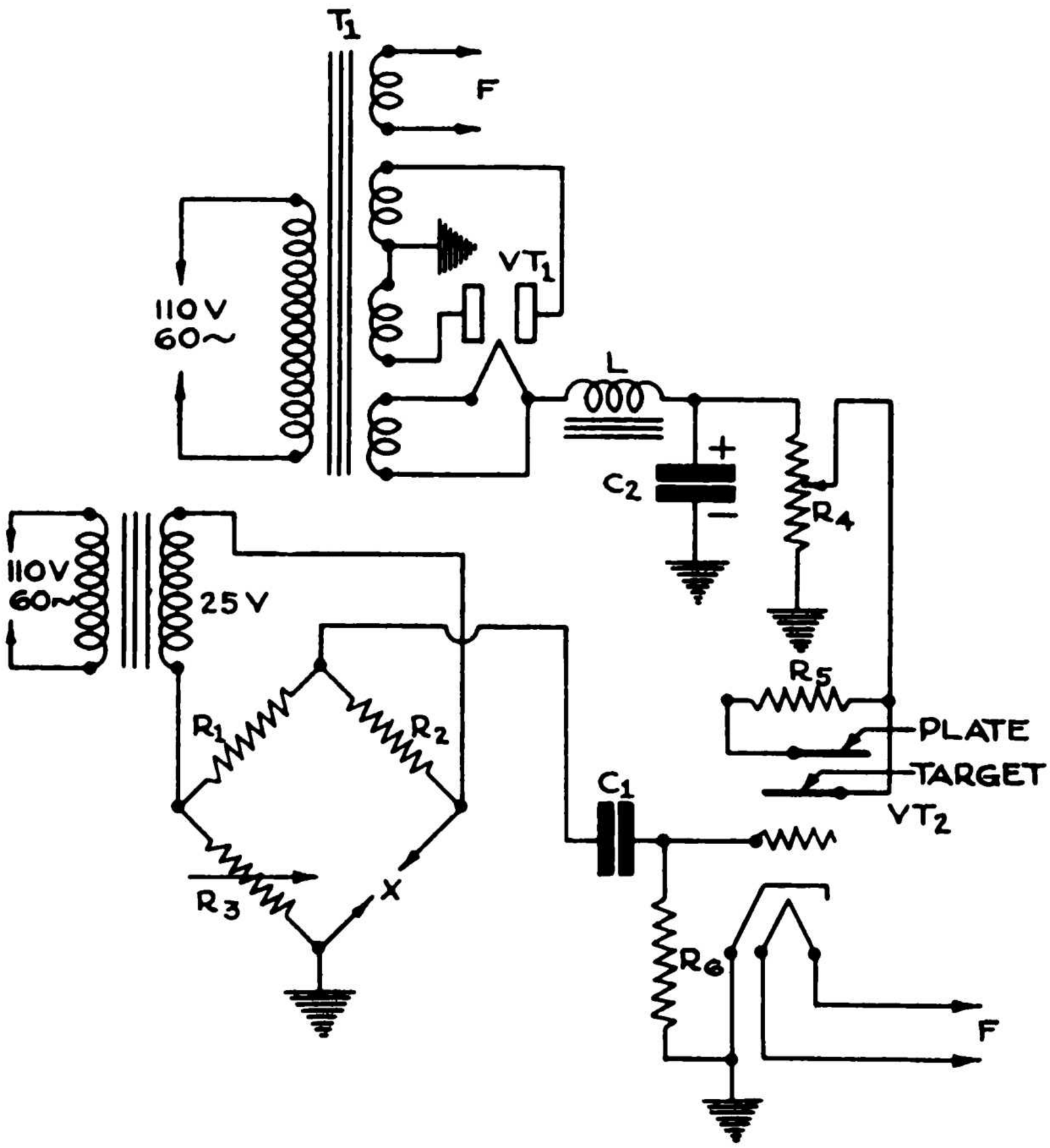

$$\frac{R_1}{R_2} = \frac{R_3}{R_x}$$

$$R_x = \frac{R_2}{R_1} R_3$$

Digitized by Google Original from UNIVERSITY OF MICHIGAN

Legend:
T_1—Power Transformer
T_2—Step Down Transformer
VT_1—Type 80 Rectifier Tube
VT_2—Type 6E5 Vacuum Tube (Electric Eye)
L—10 Henry Choke Coil
C_1—.01 MFD Paper Dielectric Capacitor
C_2—8 MFD Electrolytic Capacitor
R_1—1000 Ohm Resistor
R_2—1000 Ohm Resistor
R_3—Variable Resistor to suit
R_4—20,000 Ohm Potentiometer
R_5—1 Megohm Resistor
R_6—10 Megohm Resistor

The resistance values in the bridge network proper, may be adjusted for the measurement of resistance values over any desired range. At point X is connected a standard platinum electrode resistivity cell, preferably of a type such as the Oswald type.

In operation, the $6E5$ indicator tube operates to show a null point value by a wide angle opening. This is a reverse application of the usual procedure but provides for maximum response.

Measurement of Audio Frequency Impedance of Electrolytic Capacitors

By the employment of the following circuit arrangement, the impedance of electrolytic capacitors may be determined over the audio frequency spectrum.

In operation, the value of R is adjusted so that the same voltage reading is obtained with the switch K in either position. When such a condition of adjustment

Digitized by Google Original from UNIVERSITY OF MICHIGAN

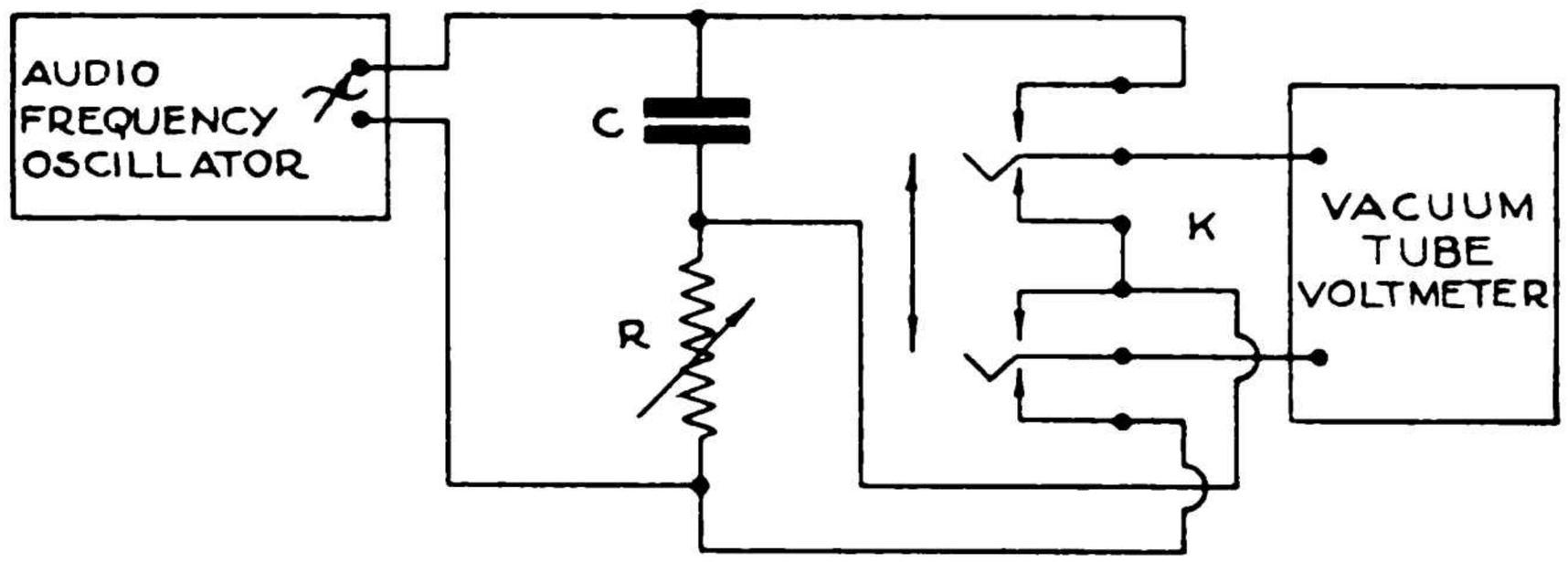

Legend:
C—Electrolytic Capacitor Under Test
R—Decade Resistance Box
K—D.P.D.T. Switch

is obtained, the impedance of the capacitor *C* is equal to the resistance indicated at *R*, at whatever frequency is employed.

Measurement of Radio Frequency Impedance of Electrolytic Capacitors

In the determination of the impedance of electrolytic capacitors at radio frequencies the direct resistance substitution method has been found to be both simple and effective. For such determinations, the following circuit arrangement may be employed.

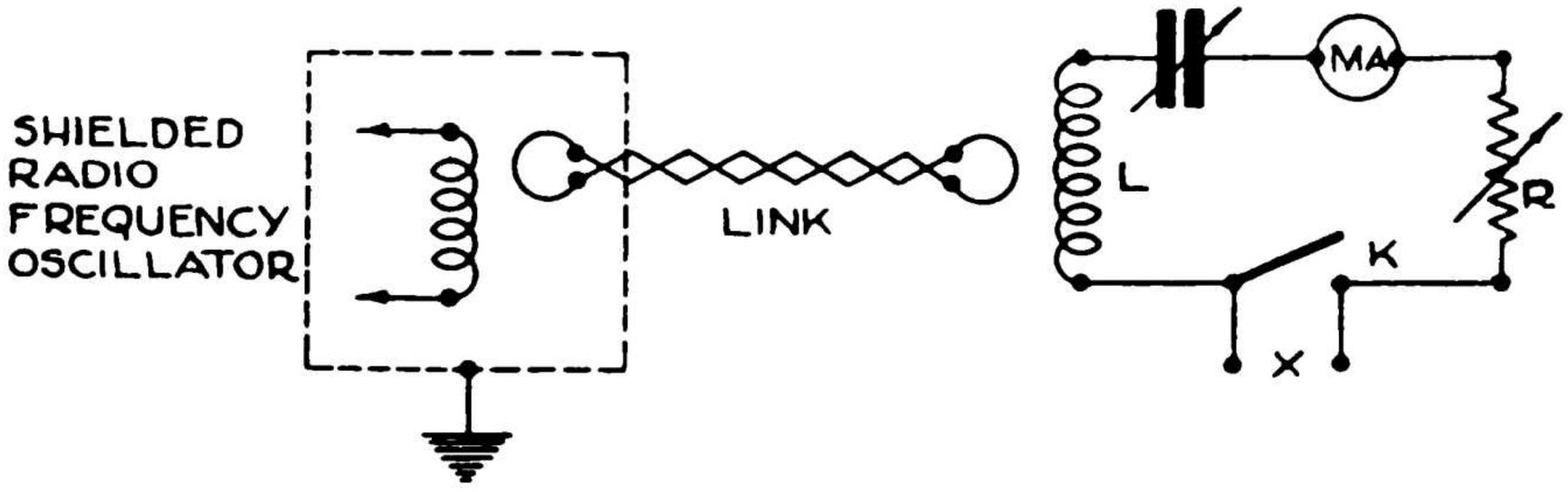

Digitized by Google Original from UNIVERSITY OF MICHIGAN

In operation, the inductance L is coupled, by a single turn link or transmission line, to a shielded radio frequency oscillator. C is a variable air capacitor connected in series with the inductance coil L, a radio frequency milliammeter MA, a radio frequency type decade resistance box R and the short circuiting bar or switch K.

The oscillator is set at the desired frequency, the bar or switch K is closed and with R set at the maximum value of resistance, C is adjusted to resonance. This is indicated by maximum deflection of the radio frequency milliammeter. The value of radio frequency current is noted, the switch K open circuited and the electrolytic capacitor to be measured is connected at X. The capacitor C is readjusted to resonance and the value of R reduced (keeping the circuit in a resonant condition) until the original radio frequency current value is again obtained. The resistance removed from the circuit to obtain this original radio frequency current reading will be equal to the impedance of the electrolytic capacitor at the frequency employed.

The inductance L should be variably coupled to the transmission link for fine adjustment of radio frequency current readings.

The decade resistance R must be especially constructed in order that no appreciable inductance is introduced into the circuit network. The resistive elements are preferably made of straight lengths of small diameter resistance wire of the type of low temperature coefficient characteristics such as manganin.

Digitized by Google Original from UNIVERSITY OF MICHIGAN

Conduction of Life Tests

In the conduction of life tests on electrolytic capacitors it is frequently desired to duplicate substantially the same conditions existing in typical filter circuit networks. To duplicate such conditions it is necessary to superimpose a certain value of alternating current potential on the applied direct current potential. The following circuit diagram illustrates a method of obtaining such a condition.

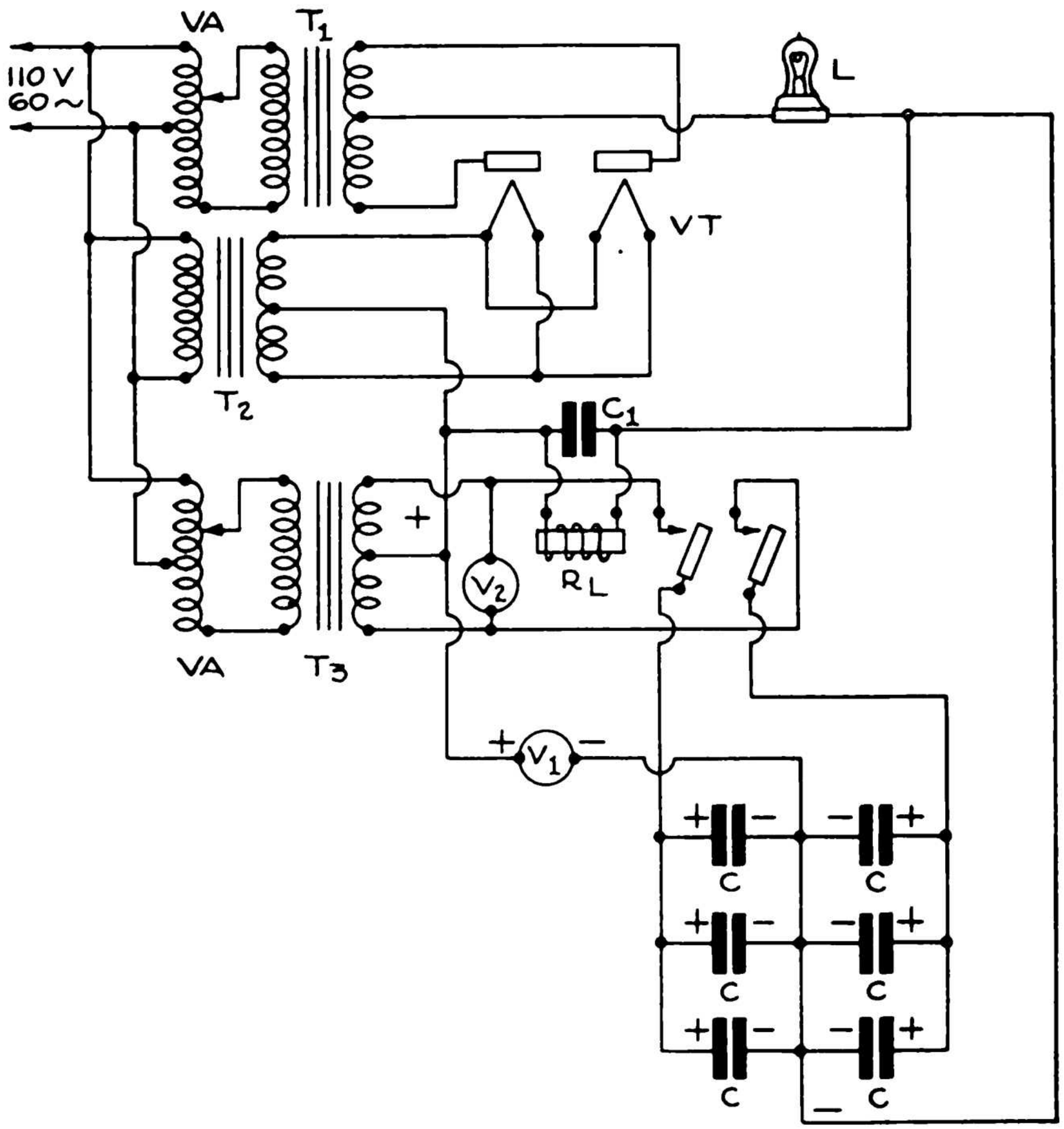

Digitized by Google
Original from
UNIVERSITY OF MICHIGAN

Legend:

VA—Variac auto-transformers for voltage control
T_1—Plate current supply transformer
T_2—Rectifier filament supply transformer
T_3—A. C. supply transformer 60 volt secondary
VT—Type 866 rectifier tubes
V_1—Direct current voltmeter 0-750 volts
V_2—Alternating current voltmeter 0-75 volts
RL—Two pole, single throw relay
C_1—2 MF-1000 volt, paper dielectric capacitor
C—Electrolytic capacitors under test
L—Flash or pilot lamp for fuse.

In operation, the electrolytic capacitors are connected in series (opposing) across the alternating current voltage supply. The value of superimposed alternating current potential on each capacitor is half that indicated on the A. C. voltmeter, provided that the capacitors are placed on test in pairs, each having substantially the same capacity. This is the usual procedure and the total capacity placed on such half of the test circuit should be equal.

The flash lamp serves as an excellent high voltage fuse to protect the direct current supply in case of a short circuited capacitor.

The relay RL serves to automatically disconnect the alternating current in case the direct current supply is disconnected. This feature is necessary to prevent the application of pure alternating current to the capacitors.

Similar life tests under various temperature conditions may be conducted by placing similar circuit positions into the proper thermostatically controlled heat chambers or ovens.

Digitized by Google Original from UNIVERSITY OF MICHIGAN

USEFUL TABLES

Metric Equivalents

1 meter	=	39.37 inches = 1.0936 yards
1 square meter	=	1.196 square yards
1 gram	=	.03527 ounces (avoir.)
1 kilogram	=	2.2046 pounds (avoir.)
1 inch	=	2.54 centimeters
1 foot	=	30.48 centimeters
1 yard	=	0.9144 meters
1 square inch	=	6.452 square centimeters
1 square foot	=	9.2903 square decimeters
1 square yard	=	0.8361 square meters
1 ounce (avoir.)	=	28.35 grams.

Conversion Factors

Degrees Fahrenheit (°F) = (Degrees Centigrade x 1.8) + 32

$$\text{Degrees Centigrade (°C)} = \frac{\text{Degrees Fahrenheit} - 32}{1.8}$$

Approximate pH Values of Acids

Hydrochloric, N	0.1	Malic, O.IN	2.2
Hydrochloric, O.IN	1.1	Boric, O.IN	5.2
Hydrochloric, O.OIN	2.0	Citric, O.IN	2.2
Sulphuric, N	0.3	Formic, O.IN	2.3
Sulphuric, O.IN	1.2	Lactic, O.IN	2.4
Sulphuric, O.OIN	2.1	Acetic, N	2.4
Orthophosphoric, O.IN	1.5	Acetic, O.IN	2.9
Tartaric, O.IN	2.2	Acetic, O.OIN	3.4
Oxalic, O.IN	1.6		

Digitized by Google Original from UNIVERSITY OF MICHIGAN

Approximate pH Values of Bases

Sodium Hydroxide, N	14.0
Sodium Hydroxide, O.IN	13.0
Sodium Hydroxide, O.OIN	12.0
Potassium Hydroxide, N	14.0
Potassium Hydroxide, O.IN	13.0
Potassium Hydroxide, O.OIN	12.0
Sodium Metasilicate, O.IN	12.6
Trisodium Phosphate, O.IN	12.0
Sodium Carbonate, O.IN	11.6
Ammonia, N	11.6
Ammonia, O.IN	11.1
Ammonia, O.OIN	10.6
Sodium Borate, O.IN	9.2
Sodium Bicarbonate, O.IN	8.4

Approximate pH Ranges of Common Indicators

Name	*pH Range*	*Color Change*
Acid Cresol Red	0.2 - 1.8	Red-Yellow
Acid Meta Cresol Purple	1.2 - 2.8	Red-Yellow
Thymol Blue	1.2 - 2.8	Red-Yellow
Benzo Yellow	2.4 - 4.0	Red-Yellow
Bromcresol Green	3.8 - 5.4	Yellow-Blue
Bromphenol Blue	3.0 - 4.6	Yellow-Blue
Methyl Red	4.4 - 6.0	Red-Yellow
Chlorphenol Red	5.2 - 6.8	Yellow-Red
Bromcresol Purple	5.2 - 6.8	Yellow-Purple
Bromthymol Blue	6.0 - 7.6	Yellow-Blue
Phenol Red	6.0 - 8.4	Yellow-Red
Cresol Red	7.2 - 8.8	Yellow-Red
Meta Cresol Purple	7.6 - 9.2	Yellow-Purple
Thymol Blue	8.0 - 9.6	Yellow-Blue
Phthalein Red	8.6 - 10.2	Yellow-Red
Tolyl Red	10.0 - 11.6	Red-Yellow
Parazo Orange	11.0 - 12.6	Yellow-Orange
Acyl Blue	12.0 - 13.6	Red-Blue

Digitized by Google Original from UNIVERSITY OF MICHIGAN

Melting Points of Resins in Degrees Centigrade

Amber	250-325
Copal (Congo)	220
Copal (Kauri)	165
Copal (Manila)	120
Copal (Zanzibar)	280
Cumarone	127-142
Dammar (Batavia)	100
Dammar (Singapore)	95
Dragons Blood	120
Gibsonite	123
Ester Gum	120-140
Guiac	85- 90
Indene	127-142
Mastic	105-120
Sandarac	135-150
Shellac	120

Melting Points of Common Waxes in Degrees Centigrade

Bayberry Wax	40- 44
Beeswax, White	63- 70
Beeswax, Yellow	61
Chinese Insect Wax	80- 83
Candelila Wax	67- 70
Carnauba	83- 86
Ceresine	74- 80
Japan Wax	55- 59
Montan	76-130
Ozokerite	65-110
Paraffin	55- 65
Spermaceti	44- 47

Digitized by Google Original from UNIVERSITY OF MICHIGAN

INDEX

A

Accordion pleated anode, 28
Acid electrolytes, 56
Acids, pH values, 268
Active anodic film, 57
Aging, wet electrolytic capacitor, 70
  dry electrolytic capacitor, 180, 242
Air dielectric, 9
Alkali cleaning of aluminum, 49
Alternating current, component, 80, 216, 224
A. C. electrolytic capacitor, 233
  applications of, 251
  electrolyte used in, 243
  fabrication, 241
Aluminum, cleaning, 46, 49, 50, 52, 53
  chromium plating of, 24
  containers, 23, 154, 159
  hydroxide formation of, 62, 114
  riser rod, 29
Ammonium hydroxide, concentration, 68
  pH values, 76
  resistivity characteristics, 133
Anode, aluminum, 13
  common, 151
  etching of, 36, 38, 40, 45, 94, 97, 99
  film formation of, 46, 54, 105
  metal clad, 101
  preparatory cleaning of, 47
  riser rod of, 29
  stem bushing of, 30
  stem seals of, 31
  structures of, 27, 88
  surface area of, 64, 115, 241
  tabs of, 87
Atom, definition, 3
Attenuation, definition, 215
  a.c. component, 222
Audio frequency impedance, 263

B

Bases, pH values of, 269
Boiling point temperatures, 129
  pH value effect of, 135
  resistivity effect of, 134
  scintillating voltage effect of, 136
Boric acid, film formation with, 58
  solubility of, 65
Breakdown voltage, temperature effect of, 165
Bridge, wheatstone, 196
  impedance, 198, 200
  rectifier type of, 214, 231
Bushing, anode stem, 31
By-pass capacitor, application, 231

C

Capacitor, electric, 6
  a.c. motor, 251
  definition, 6
  electrolytic, 10
  voltage rating of, 9
Capacity, definition, 7
  basic formula of, 8
  determination of, 64, 115, 192, 245
  effects of temperature on, 73, 162
  relation of, 17
  unit of, 9
Cathode, 89
  common, 149
  formation of, 103
Cellophane separator, 92
Celluloid separator, 34

Digitized by Google Original from UNIVERSITY OF MICHIGAN

Cellulose separator, 91, 242
Centrifugal force, 146
Centrifugal impregnation, 144
Centrifuge, 147
Characteristics, fill electrolyte, 65
  dry electrolytic, 161, 173, 247
  idle shelf, 176, 249
  life, 177, 249
  radio frequency, 173
  regulating, 82, 168
  temperature, 73, 161, 247
  voltage, 247
  voltage breakdown, 179
Chemical etching, 38
Circuit, aging, 183
  a.c. motor, 253
  a.c. test; 246
  bridge, 196
  bridge rectifier, 214, 231
  common anode, 151
  current doubling, 215
  electrolytic test, 201
  filter, 217
  leakage measuring, 177, 189
  life test, 266
  motor reversing, 254
  peak voltmeter, 261
  rectifier, 206, 208, 213, 231
  resistance substitution, 203
  voltage doubling, 214
Circular pleated anode, 28
Cleaning, anode preparatory, 46
  potassium dichromate, 50, 53
  sodium borate, 52
  sodium carbonate, 50
  sodium hydroxide, 49
Coiled type anode, 28
Common anode winding, 151
Common cathode winding, 149
Conductor, definition, 5
Construction, wet electrolytic capacitor, 22
  dry electrolytic capacitor, 86, 240
  tab, 87
Container, cardboard, 154
  chromium plated, 24
  covers of, 25
  dry electrolytic, 154, 243, 259
  metal, 157
  mounting of, 24
  sizes of, 24
Continuous etching, 94
Continuous film formation, 59, 107
Copper chloride-hydrochloric acid etching, 43
Copper oxide rectifier, 228
Current, surging, 63
  a.c. component, 80
  doubling circuit for, 215
  forming, 60
  leakage, 16, 161
Cut-off frequency, 219

D

Dielectric, definition, 5
  active and inactive, 57
  constant of, 9
Dry electrolytic capacitor, aging, 181
  alternating current, 235
  application of, 205, 231, 251
  characteristics of, 161, 172, 247
  construction of, 85
  definition, 84
  idle shelf characteristics of, 176, 249
  leakage current of, 161, 168
  life of, 177
  regulation characteristics of, 168
  testing of, 184, 245, 250

E

Effect of capacity on motor torque, 256
Effect of power factor on motor torque, 257
Electric current, definition, 4
Electrical capacitor, 6
Electricity, definition, 4

Digitized by Google Original from UNIVERSITY OF MICHIGAN

Electrolyte, dry electrolytic capacitor, 92
fill, 65
film formation, 55, 58, 113
non-freezing, 68
organic acid, 120
oxalic acid, 56
pH values of, 76
plastic and resinous, 136
resistivities of, 67
scintillating voltage of, 68
solvent type, 125
sulphuric acid, 56
wet electrolytic capacitor, 35
Electrolytic capacitor, definition, 10
alternating current, 235
dry type, 84
multiple section, 149
types of, 11, 149
wet type, 21
Electrolytic cell, description of, 13
capacity relationship of, 14
non-polarized, 235
Electrons, definition, 4
current of, 15
drift of, 5
emission of, 15
Equivalent series resistance, 18
dry electrolytic capacitor, 170
effect of separator on, 173
measurement of, 198, 204
temperature effect of, 165
wet electrolytic capacitor, 73
Etching, chemical, 38
continuous, 94
copper chloride, 44
copper chloride - hydrochloric acid, 43
diagram of, 45, 95
electrochemical, 97
hydrochloric acid, 40
mechanical, 36
screen, 99

F

Fabrication, wet electrolytic capacitor, 36
dry electrolytic capacitor, 94
Farad, definition, 9
Field strength, definition, 17
Fill electrolytes, 65
Film formation, anodic, 54
active and inactive, 57
boric acid, 58
continuous, 59, 106
electrolytes for, 55
multiple, 111
oxalic acid, 56
still, 59, 105
sulphuric acid, 56
Filter, definition, 215
attenuation, 222
circuit of, 217
L type, 218
multiple section, 226
Force, centrifugal, 146
Full-wave rectifier, 208, 213

G

Gain, etching, 41
Gauze separator, 90
Gradient, forming voltage, 108

H

Half-wave rectifier, 206
circuit of, 213
Hard rubber separator, 34
Helical type anode, 28
High vacuum rectifier, 209
Hydrochloric acid etching, 40
Hydrolysis of aluminum, 53
Hydrostatic impregnation, 144

I

Idle shelf characteristics, wet electrolytic, 74
dry electrolytic, 176, 249
Impedance, formula for, 185
bridge determination of, 197

Digitized by Google Original from UNIVERSITY OF MICHIGAN

Impregnation, dry electrolytic capacitor, 140
centrifuge, 144
machine, 143
soak, 141
Inactive anodic film, 57
Indicators, table of, 269
Insulator, definition, 5

L

L type filter, 219
Ladder network, 226
Leakage current, cause of, 16
measurement of, 177, 188
recovery, 176, 189
temperature effect on, 73, 161, 167
Life characteristics, wet electrolytic, 78
dry electrolytic, 177, 249, 266
Life test circuit, 266
Limitations, structural, 18
a.c. current, 80
operating, 78, 258
Low pass filter, 215

M

Machine impregnation, 143
Matter, definition, 1
gaseous, 1
liquid, 1
solid, 1
Measurement, audio frequency impedance, 263
capacity, 192, 203, 246
equivalent series resistance, 198, 204
impedance, 185
leakage current, 176, 188
leakage recovery, 189
peak voltage, 261
power factor, 205, 246
radio frequency impedance, 264
regulation current, 188
resistance, 246, 262
Mechanical etching, 36
Melting points of waxes and resins, 270
Mercury vapor rectifier, 210
Metal clad anode, 101
Metal containers, 157
Microfarad, definition, 9
Molecule, definition, 2
Motor, capacity, 251
Multiple film formation, 111
Multiple section capacitors, 149
Multiple section filters, 226

N

Network, filter, 218
ladder type, 226
Nitric acid, effect of, 48
Non-freezing electrolyte, 68
Non-polarized electrolytic capacitor, 235
application of, 251
construction of, 240
fabrication of, 241

O

Operating position, wet electrolytic, 24
Organic acid electrolytes, 120
Oxalic acid film formation, 56
Oxide, aluminum, 13

P

Paste impregnation, 142
Peak voltmeter circuit, 261
pH values, table of, 269
electrolyte, 76, 135
Phase angle, definition, 186
Phase difference, 186
Plastic type electrolytes, 136
Plating, chromium, 24
Polarization, cause of, 15
Potassium dichromate cleaning, 50, 53
Power factor, definition, 186
filter action, effect of, 224
measurement of, 205, 246
motor torque effect of, 257

Digitized by Google Original from UNIVERSITY OF MICHIGAN

R

Radial type anode, 28
Radio frequency characteristics, 173
Radio frequency impedance, 264
Rectifier, applications of, 228
  bridge, 214
  circuits, 228, 231
  copper oxide, 228
  full-wave, 208
  half-wave, 206
  high-vacuum, 209
  mercury vapor, 210
  theory, 16, 206
  tungar bulb, 228
  types of, 209, 228
Regulation, wet electrolytic, 82
  dry electrolytic, 168, 190
Resinous type electrolytes, 136
Resistance, equivalent series, 18
Resistivity, fill electrolyte, 67
  boiling point effect on, 134
  measurement of, 262
  solvent type electrolyte, 132
Rings, mounting, 25
Riser rod, anode, 30

S

Scintillating voltage, effect of boiling point on, 136
  fill electrolyte, 68
Screen etching, 99
Separator, celluloid, 34
  dry electrolytic capacitor, 90, 242
  hard rubber, 34
Soak impregnation, 141
Sodium borate cleaning, 53
Sodium carbonate cleaning, 50
Sodium hydroxide, effect on aluminum of, 39
  cleaning with, 49
Solder lug terminals, 33
Solvent type electrolytes, 125
Stem bushing, anode, 30
Stem seals, anode, 30
Still formation, 59, 105
Strength, field, 17
Structural limitations 18
Sulphuric acid film formation, 56

T

Tab construction, 87
Tables, 268
Tanks, formation, 106, 108
Tantalum-lead rectifier, 231
Temperature characteristics, dry electrolytic, 161
  wet electrolytic, 73
Temperature conversion factors, 268
Terminals, solder lug, 33
Testing of electrolytic capacitors, 184
  a.c. electrolytic capacitors, 245, 250
  direct current leakage, 188
  life, 266
Theory, electrolytic capacitor, 12
  filters, 219
  vacuum tube rectifier, 206
Tungar rectifier, 231

V

Vacuum soak impregnation, 141
Vents, 25, 27
Voltage, a.c. measuring, 247
  breakdown, 18, 165, 179
  capacity relation with, 17, 115
  doubling circuit, 214
  formation, 118
  gradient, 108
  multiplication of, 232
  scintillating, 68, 191
  sparking, 18

Digitized by Google Original from UNIVERSITY OF MICHIGAN

W

Waxes, melting points of, 270
Wet electrolytic capacitors, 21
  a.c. component, 80
  aging, 70
  life characteristics, 78
  pH values of electrolyte of, 76
  regulation, 82
  temperature characteristics, 73
  testing, 184
Wheatstone bridge, definition of, 196
Winding, dry electrolytic, 144
  multiple, 149
Working voltages, 118

Digitized by Google Original from UNIVERSITY OF MICHIGAN